SILTEC®

CABLE HYGIENE
CABLE ROUTING SYSTEMS

WIRE CABLE TRAYS

- locking trays

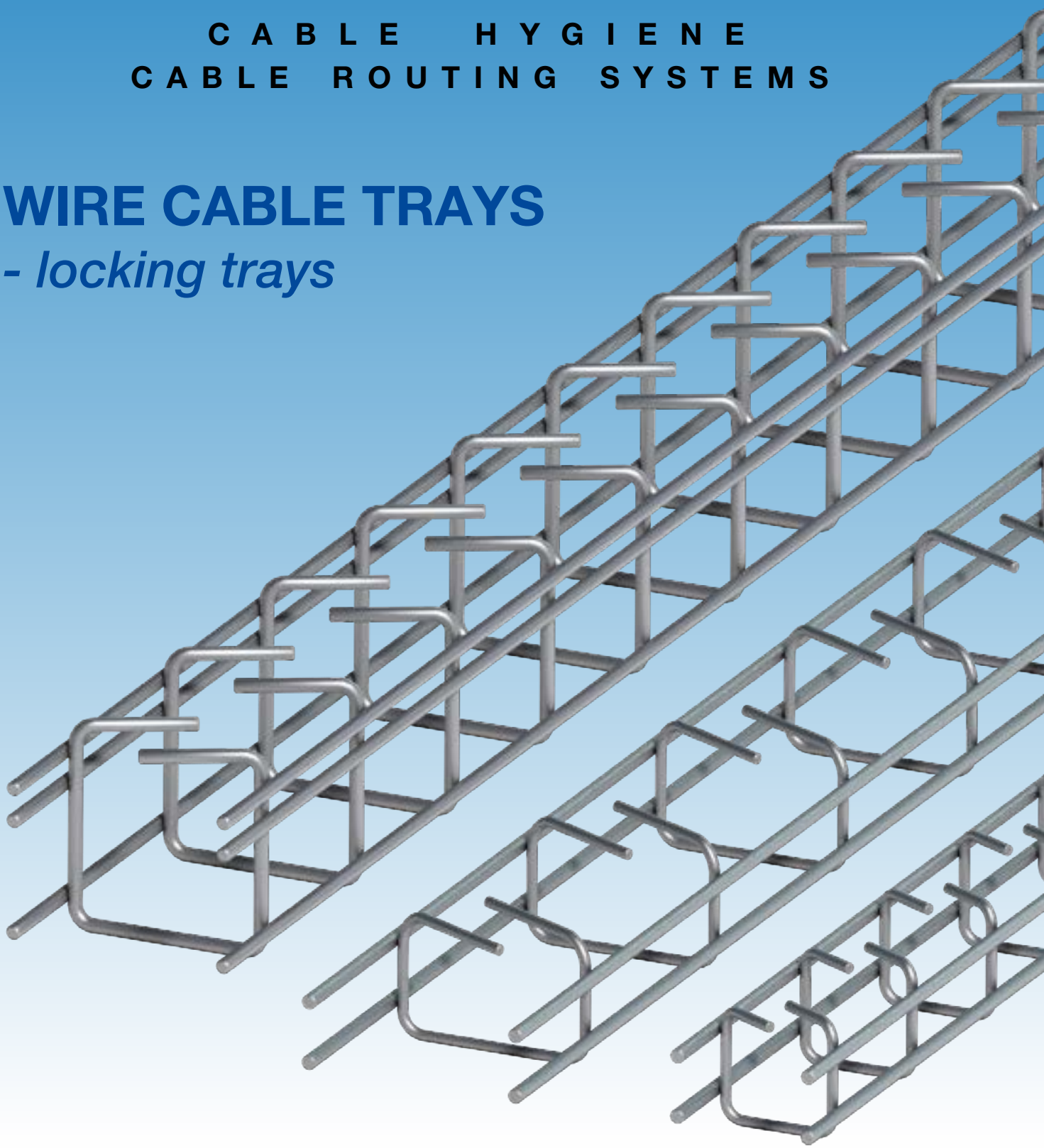

PRODUCT INFORMATION

Distributed by Gross Automation | +1 (262) 252-1600 | sales@grossautomation.com

Table of Contents

Locking Cable Trays S20 - S22N, S121-S123 . . . . . Pgs 4 - 5

Locking Cable Trays K25 - K91 . . . . . Pgs 6 - 7

Assembly Directions . . . . . Pgs 7 - 8

Product Overview . . . . . Pgs 10 - 11

Distributed by Gross Automation | +1 (262) 252-1600 | sales@grossautomation.com

SILTEC CABLE ROUTING SYSTEM

SILTEC cable routing system has been developed with optimal function in mind and with emphasis on simplicity and accessibility for the purposes of thorough cleaning and heat dissipation.

SILTEC cable routing system is made up of durable components of steel of highest quality, resistive to corrosion and with excellent chemical resistance.

SILTEC cable routing system is suitable for:
- The Food industry
- The Chemical industry
- Machine builders
- Office and computer environments
- Electrical installations in general

Cable trays are delivered in lengths of 118 inc. / 3000 mm. Width varies from **1 inc. to 24 inc. / 25 mm to 600 mm, and height from 1 inc. to 5 inc. / 25 mm to 125 mm.**

Cable trays with custom measurements are made upon request.

All cable trays are made of round material which is gentle on cables, tubing, installers and maintenance personnel.
SILTEC cable trays are produced in Stainless steel

SILTEC cable routing system solves issues with the transport of energy in cables – simple, effective and environmentally correct.

SILTEC CABLE ROUTING SYSTEM
- Comes with the following wire cable tray types

Open standard cable trays

Locking cable trays

Open compact trays

Heavy duty cable trays

Cable trays for one cable

In addition, we offer a large number of specialty trays and a comprehensive program of assembly parts, mounts and accessories.

Distributed by Gross Automation | +1 (262) 252-1600 | sales@grossautomation.com

Siltec Locking Cable Trays

Tray Overview

S20		**1.0" x 1.0" x 118" - ø0.15"** *25 x 25 x 3000 mm - ø4 mm* 316 St. Steel 570598 610100 4
S20N		**1.0" x 1.0" x 118" - ø0.15"** *25 x 25 x 3000 mm - ø4 mm* 304 St. Steel 570598 710100 3
S21		**2.0" x 2.0" x 118" - ø0.15"** *50 x 50 x 3000 mm - ø4 mm* 316 St. Steel 570598 610101 1
S21N		**2.0" x 2.0" x 118" - ø0.15"** *50 x 50 x 3000 mm - ø4 mm* 304 St. Steel 570598 710101 0
S22		**3.0" x 3.0" x 118" - ø0.15"** *75 x 75 x 3000 mm - ø4 mm* 316 St. Steel 570598 610102 8
S22N		**3.0" x 3.0" x 118" - ø0.15"** *75 x 75 x 3000 mm - ø4 mm* 304 St. Steel 570598 710102 7
S121		**1.0" x 2.0" x 118" - ø0.15"** *25 x 50 x 3000 mm - ø4 mm* 304 St. Steel 570598 710121 8
S123		**1.0" x 4.0" x 118" - ø0.15"** *25 x 100 x 3000 mm - ø4 mm* 304 St. Steel 570598 710123 2

Tray Dimensions

S20:

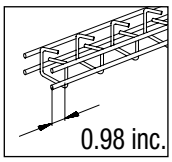

S20N - S22N:

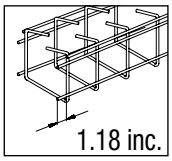

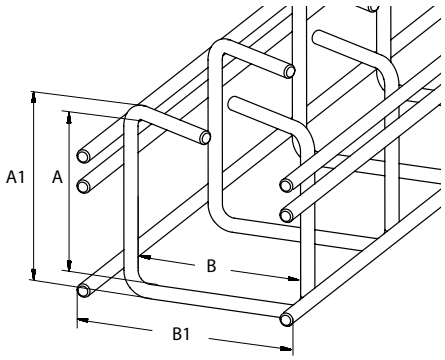

All dimensions in inches!

	S20	S20N	S21	S21N	S22	S22N	S121	S123		
A:	1.06	1.06	1.97	1.97	2.95	2.95	1.18	1.22		
A1:	1.30	1.30	2.28	2.28	3.27	3.27	1.42	1.54		
B:	1.18	1.18	1.97	1.97	2.95	2.95	1.97	3.74		
B1:	1.73	1.73	2.60	2.60	3.58	3.58	2.52	4.37		

Splice Parts / Mounts

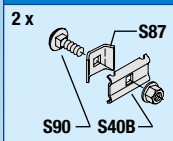

S40 Splice Kit
316 St. Steel 570598 650501 7

S40B Splice Plate
316 St. Steel 570598 650512 3

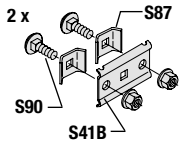

S41 Splice Kit
316 St. Steel 570598 650502 4

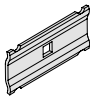

S40W Splice Plate
316 St. Steel 570598 650514 7

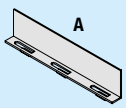

S85 Divider
A: 78.74" / 2000 mm
316 St. Steel 570598 680590 2

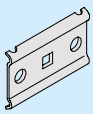

S41B Splice Plate
316 St. Steel 570598 650513 0

S87 Splice Washer
316 St. Steel 570598 680596 4

S42 Splice Bracket
316 St. Steel 570598 650508 6

S15 Plastic Caps
ø0.15" / ø4 mm - black
Polypropylene
570598 199621 6

S19 Bolt Cutter
570598 210002 5

S119 Bolt Cutter
570598 210003 2

Ceiling Mounts

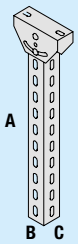

S71 Ceiling Hanger

S71/250
A: 9,84", **B**: 2,48", **C**: 2,48"
316 St. Steel 570598 665573 6

S71/500
A: 19.69", **B**: 2,48", **C**: 2,48"
316 St. Steel 570598 665571 2

S71/750
A: 29,53", **B**: 2,48", **C**: 2,48"
316 St. Steel 570598 665574 3

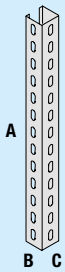

S72 Clg Hanger Extension

A: 39,37", **B**: 56 mm, **C**: 56 mm
316 St. Steel 570598 665575 0

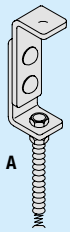

S73 Ceiling Hanger

A: 39,37"
316 St. Steel 570598 665572 9

Distributed by Gross Automation | +1 (262) 252-1600 | sales@grossautomation.com

Mounting Brackets

More Assembly Parts, Mounts and Accessories on Pgs 8 - 9

S46 Mounting Brackets
Horizontal A
316 St. Steel
570598 655540 1

S47 Mounting Brackets
Horizontal A
316 St. Steel
570598 655541 8

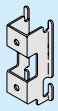

S48 Mounting Brackets
Horizontal A
316 St. Steel
570598 655542 5

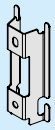

S157 Mounting Brackets
Vertical A
316 St. Steel
570598 655544 9

S56 Mounting Brackets
Vertical D
316 St. Steel
570598 655550 0

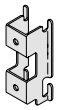

S57 Mounting Brackets
Vertical D
316 St. Steel
570598 655551 7

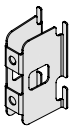

S155 Mounting Brackets
Vertical A
316 St. Steel
570598 650155 2

S156 Mounting Brackets
VerticalA
304 St. Steel
570598 755550 9

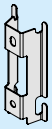

S157 Mounting Brackets
Vertical A
304 St. Steel
570598 755551 6

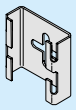

S45M Mounting Brackets
Horizontal A B C

316 St. Steel	570598 655531 9
Hot dip galv.	570598 555531 0
El. pl. Zinc	570598 355531 2

S14 Mount
Polypropylene ø4 mm
570598 199610 0

S14M Mount
Polypropylene ø4mm
570598 199611 7

S14BD Mount, detectable
Polypropylene ø4 mm
570598 199630 8

S14MBD Mount, detectable
Polypropylene ø4mm
570598 199631 5

Disposition

Horizontal A: Horizontal B: Horizontal C: Vertical D:

	S20	S20N	S21	S21N	S22	S22N	S121	S123
Splice Parts								
S40	●	●					●	●
S40B	●	●	●	●	●	●	●	●
S40W	●							
S41			●	●	●	●		
S41B			●	●	●	●	●	●
S13	●	●	●	●	●	●	●	●
S42	●	●	●	●	●	●	●	●
S85			●	●	●	●		
S87	●	●	●	●	●	●	●	●
S15	●		●	●	●	●		
Mount								
S71/S72/S73	●	●	●	●	●	●	●	●
S46	A	A					A	A
S47			A	A				
S48					A	A		
S50					D	D		
S56	D							
S156		D						
S57			D		D			
S157				D		D	D	D
S14 / S14BD			A,B	A,B	A,B	A,B		B
S14M / S14MBD	A,B	A,B					A,B	A
S155	D							
S155W		D						
S45			A,D	A,D	A,D	A,D		
S45M			A,D	A,D				
S80			A	A	A	A		
S81			A	A	A	A		

Splice Plates S40B, 40W & S41B Applications

S40B

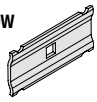
S40W

S41B

	S20	S20N	S21	S21N	S22	S22N	S121 + S123
S40B	A	A	E, G	E, G	A, G	G, J	A, J
S40W	B	-	-	-	A	-	-
S41B	-	-	A, B	-	B	J	-

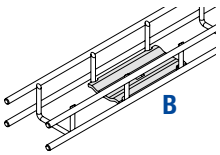

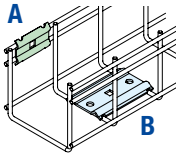

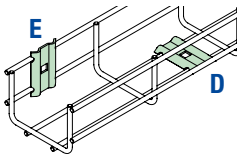

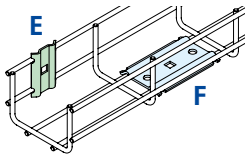

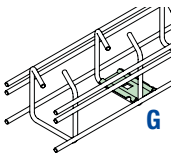

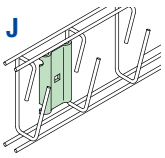

Distributed by Gross Automation | +1 (262) 252-1600 | sales@grossautomation.com

Siltec Locking Cable Trays

Tray Overview

K25		**1.0" x 1.0" x 118" - ø0.15"** *25 x 25 x 3000 mm - ø4 mm* 304 St. Steel 570598 789104 1
K40		**1.6" x 1.6" x 118" - ø0.15"** *40 x 40 x 3000 mm - ø4 mm* 304 St. Steel 570598 789102 7
K90		**1.6" x 3.5" x 118" - ø0.15"** *40 x 90 x 3000 mm - ø4 mm* 304 St. Steel 570598 789106 5
K26		**1.0" x 1.0" x 118" - ø0.15"** *25 x 25 x 3000 mm - ø4 mm* 304 St. Steel 570598 789105 8 With Welded-On Cover
K41		**1.6" x 1.6" x 118" - ø0.15"** *40 x 40 x 3000 mm - ø4 mm* 304 St. Steel 570598 789103 4 With Welded-On Cover
K91		**1.6" x 3.5" x 118" - ø0.15"** *40 x 90 x 3000 mm - ø4 mm* 304 St. Steel 570598 789107 2 With Welded-On Cover

Tray Dimensions

K25 - K91:

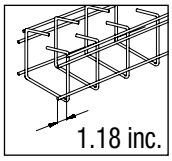

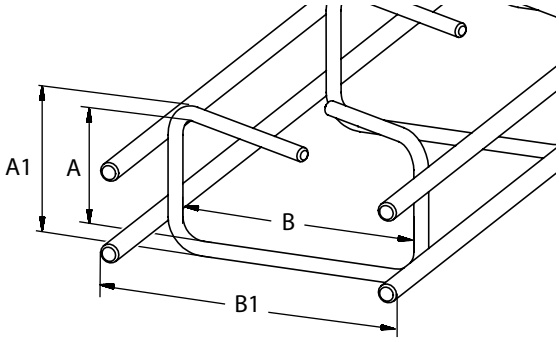

All dimensions in inches!

	K25	K40	K90	K26	K41	K91				
A:	1.10	1.57	1.57	1.10	1.57	1.57				
A1:	1.50	1.97	2.05	1.57	2.05	2.09				
B:	1.14	1.57	3.54	1,14	1.57	3.54				
B1:	1.69	2.17	4.13	1.22	2.20	4.25				

Assembly Parts

S90 **Bolt Kit**
316 St. Steel 570598 685596 9

S87 **Splice Bracket**
316 St. Steel 570598 680596 4

S42 **Splice Bracket**
316 St. Steel 570598 650508 6

S15 **Plastic Caps**
ø0.16" / ø4 mm - black
Polypropylene
570598 199621 6

S40B **Splice Platee**
316 St. Steel 570598 650512 3

Splice Plates S40B Applications

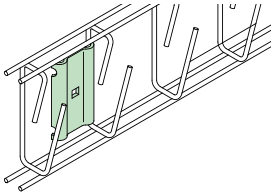

Mounting Brackets

S14 **Mount**
Polypropylene
570598 199610 0

S14BD **Mount, detectable**
Polypropylene
570598 199630 8

S14M **Mount**
Polypropylene
570598 199611 7

S14MBD **Mount, detectable**
Polypropylene
570598 199631 5

S46 **Mounting Bracket**
Horizontal: A
316 St. Steel
570598 655540 1

S51 **Mounting Bracket**
Horizonta: A
316 St. Steel
570598 655545 6

Distributed by Gross Automation | +1 (262) 252-1600 | sales@grossautomation.com

Disposition	Horizontal A:			Horizontal B:		Horizontal C:		Vertical D:		
	K25	K40	K90	K26	K41	K91				
Assembly Parts										
S90	●	●	●	●	●	●				
S40B	●	●	●	●	●	●				
S42	●	●	●	●	●	●				
S87	●	●	●	●	●	●				
Hangers / Mounts										
S71/S72/S73	●									
S14 / S14BD		A	A	A	A	A				
S14M / 14MBD	A,B									
S15	●	●	●	●	●	●				
S46	B	B	B	B	B	B				
S51	B	B	B	B	B	B				

Distributed by Gross Automation | +1 (262) 252-1600 | sales@grossautomation.com

Installation Guide

Tools

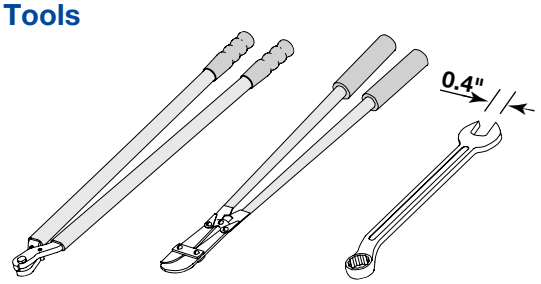

Splicing

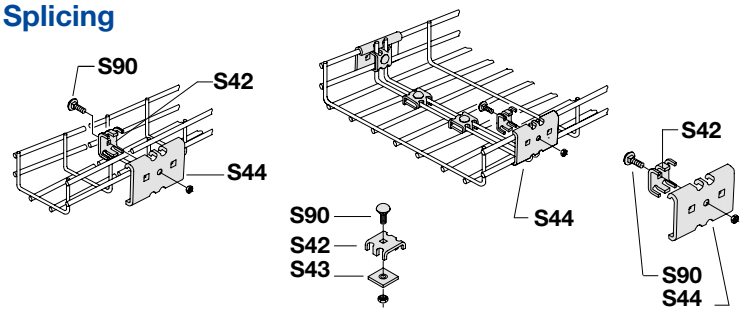

Mounting Options

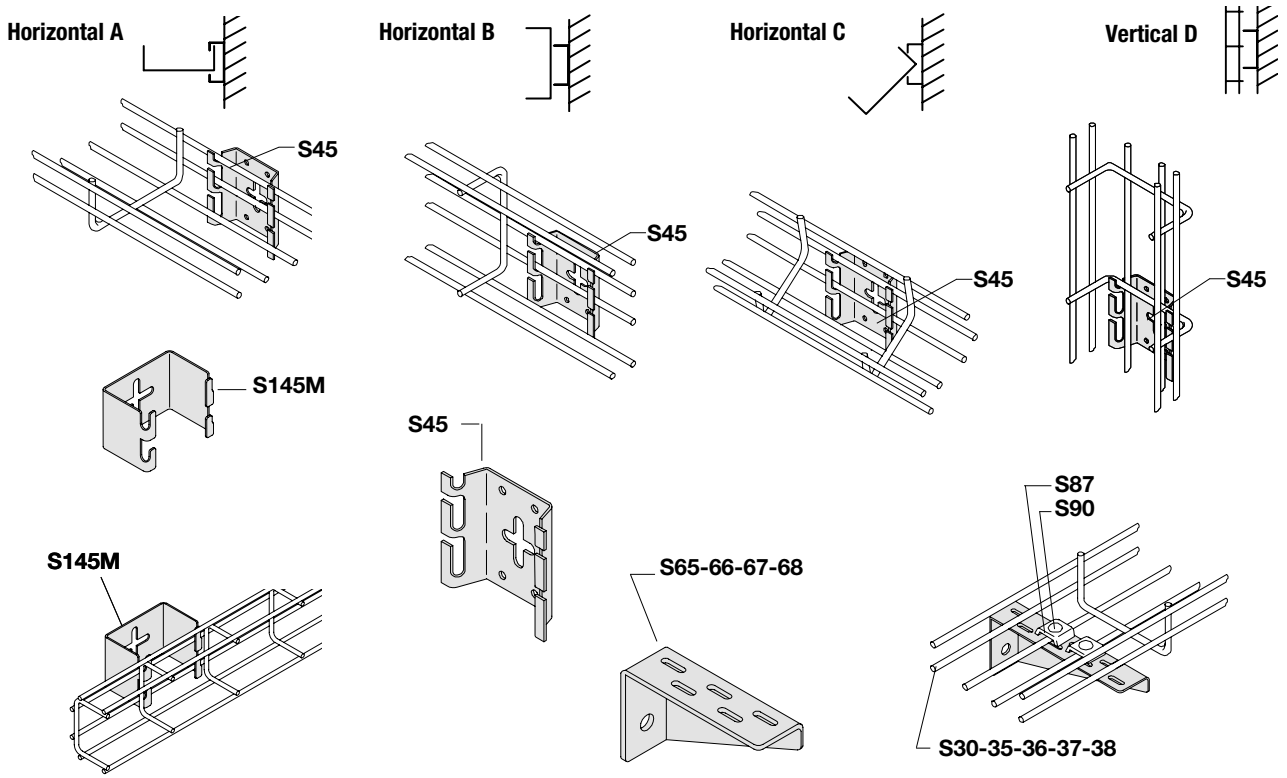

Ceiling Hanger

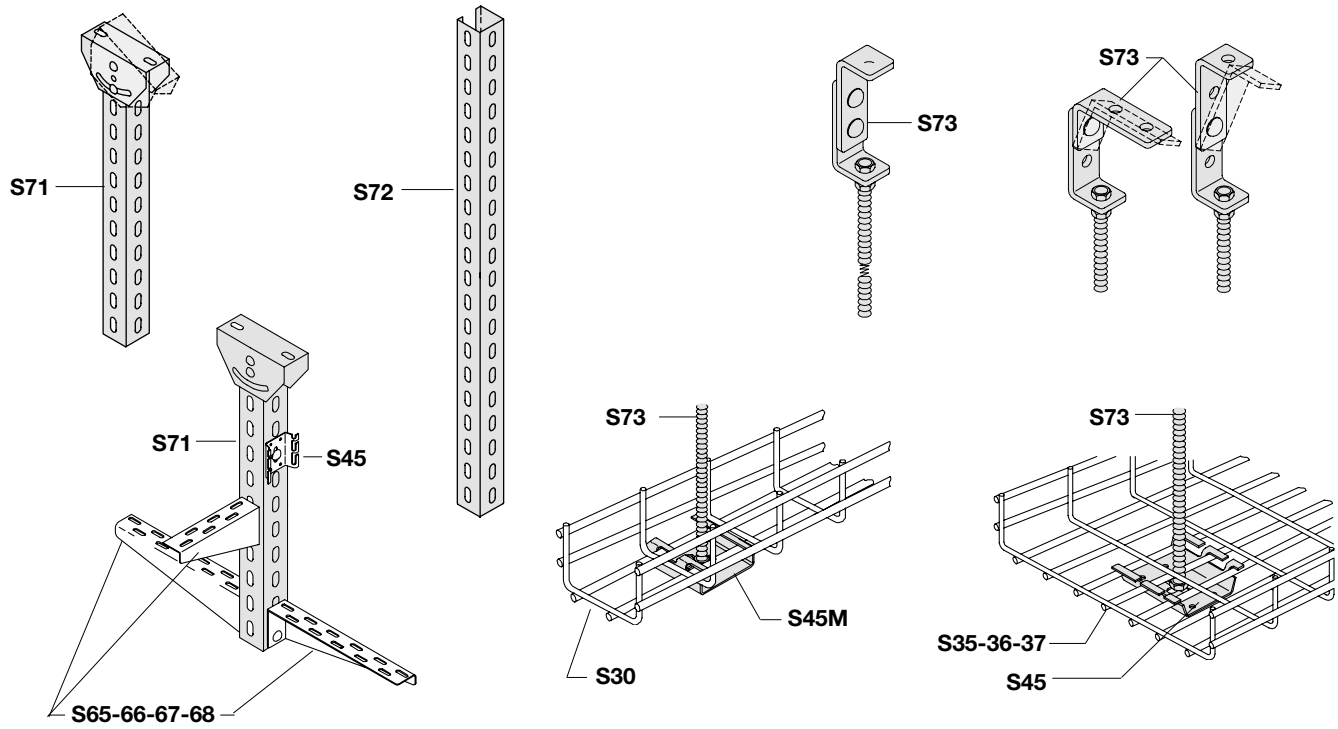

Distributed by Gross Automation | +1 (262) 252-1600 | sales@grossautomation.com

Wall Mount / Electrical Box Brackets

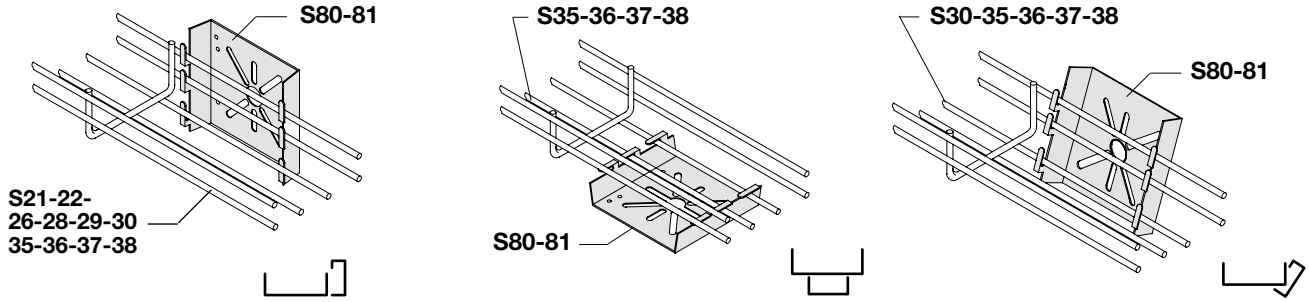

Angle bracket

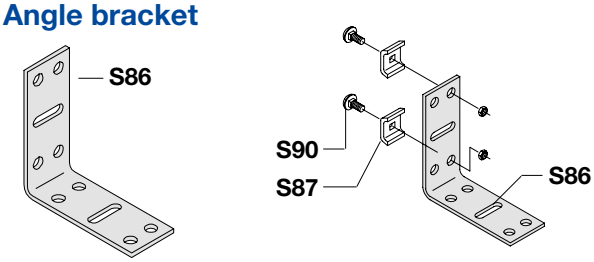

Dividers

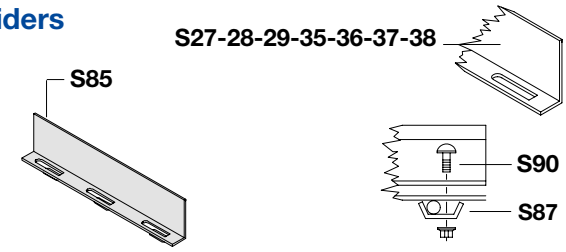

Elbows

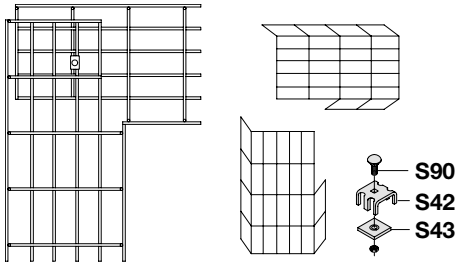

Tees and Crosses

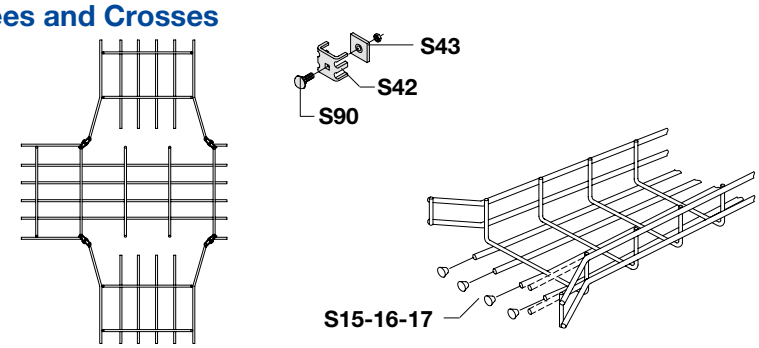

Vertical Bends

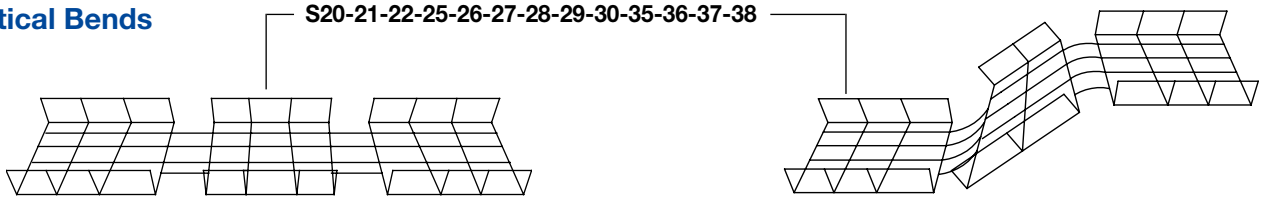

Radius Bends

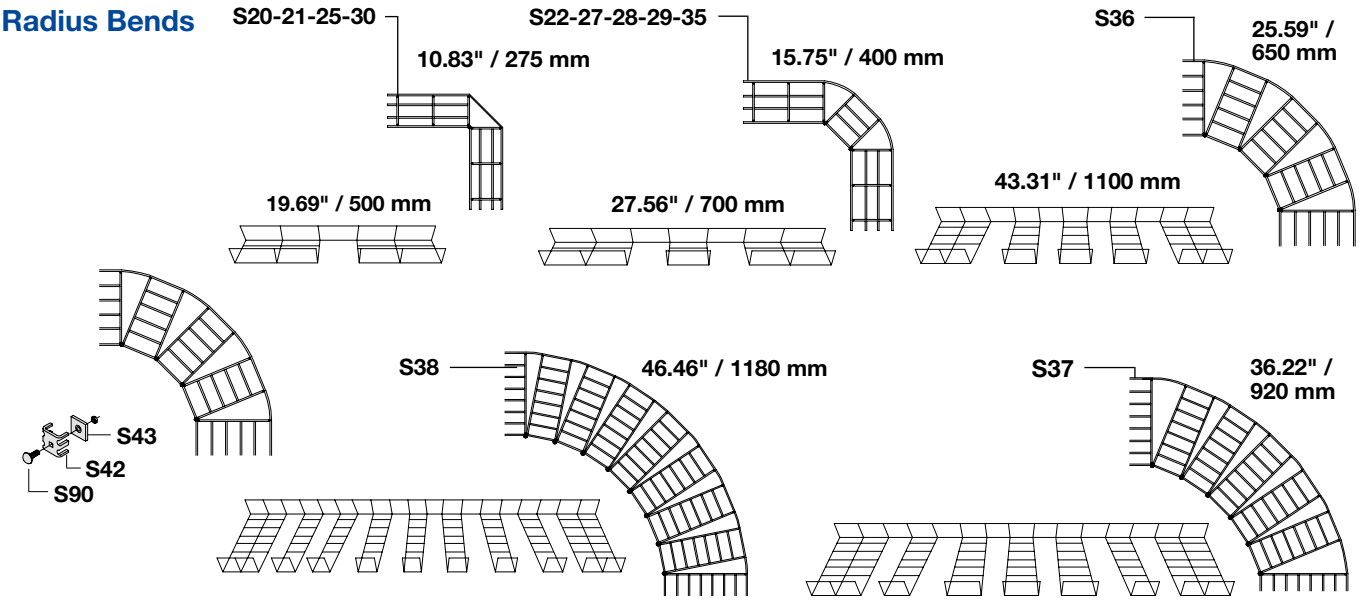

Distributed by Gross Automation | +1 (262) 252-1600 | sales@grossautomation.com

SILTEC has a Cable Tray for Every Need

Standard - open trays

S25		**1.0" x 1.0" x 118" - ø0.15"** *25 x 25 x 3000 mm - ø4 mm* 316 St. Steel 570598 620105 6 304 St. Steel 570598 720105 5
S26		**2.0" x 2.0" x 118" - ø0.16"** *50 x 50 x 3000 mm - ø4 mm* 316 St. Steel 570598 620106 3 304 St. Steel 570598 720106 2
S27		**3.0" x 3.0" x 118" - ø0.15"** *75 x 75 x 3000 mm - ø4 mm* 316 St. Steel 570598 620107 0
S28		**4.0" x 4.0" x 118" - ø0.24"** *100 x 100 x 3000 mm - ø6 mm* 316 St. Steel 570598 620108 7
S30M		**1.4" x 1.6" x 118" - ø0.15"** *35 x 40 x 3000 mm - ø4 mm* 304 St. Steel 570598 720117 8
S30		**1.8" x 2.4" x 118" - ø0.15"** *45 x 60 x 3000 mm - ø4 mm* 316 St. Steel 570598 620118 6 304 St. Steel 570598 720118 5
S30*		**1.8" x 2.4" x 118" - *ø0.20"** *45 x 60 x 3000 mm - *ø5 mm* 316 St. Steel 570598 620119 3 304 St. Steel 570598 720119 2
S35		**2.2" x 4.0" x 118" - ø0.15"** *55 x 100 x 3000 mm - ø4 mm* 304 St. Steel 570598 720120 8
S35*		**2.2" x 4.0" x 118" - *ø0.2"** *55 x 100 x 3000 mm - *ø5 mm* 316 St. Steel 570598 640120 3 304 St. Steel 570598 740120 2
S35W		**2.2" x 6.0" x 118" - ø0.20"** *55 x 150 x 3000 mm - ø5 mm* 316 St. Steel 570598 620120 9 304 St. Steel 570598 720121 5
S36		**2.2" x 8.0" x 118" - ø0.20"** *55 x 200 x 3000 mm - ø5 mm* 316 St. Steel 570598 640121 0 304 St. Steel 570598 740121 9
S37		**2.2" x 12.0" x 118" - ø0.20"** *55 x 300 x 3000 mm - ø5 mm* 316 St. Steel 570598 640122 7 304 St. Steel 570598 740122 6
S38		**2.2" x 16.0" x 118" - ø0.20"** *55 x 400 x 3000 mm - ø5 mm* 316 St. Steel 570598 640122 7 304 St. Steel 570598 740122 6
S39		**2.2" x 20.0" x 118" - ø0.20"** *55 x 500 x 3000 mm - ø5 mm* 316 St. Steel 570598 640124 1 304 St. Steel 570598 740124 0 Hot dip galv. 570598 540124 2
S39W		**2.2" x 24.0" x 118" - ø0.20"** *55 x 600 x 3000 mm - ø5 mm* 304 St. Steel 570598 740126 4

Standard - open trays

S30M-X		**2.0" x 2.2" x 118" - ø0.16"** *50 x 57 x 3000 mm - ø4 mm* 304 St. Steel 570598 786175 4
S30-X		**2.8" x 2.7" x 118" - ø0.16"** *67 x 67 x 3000 mm - ø4 mm* 304 St. Steel 570598 786180 8
S35-X		**2.8" x 4.5" x 118" - ø0.16"** *67 x 100 x 3000 mm - ø4 mm* 304 St. Steel 570598 786181 5
S36-X		**2.8" x 8.2" x 118" - ø0.20"** *67 x 200 x 3000 mm - ø5 mm* 304 St. Steel 570598 786185 3

COMPACT Trays

S115		**0.4" x 0.9" x 118" - ø0.12"** *9 x 23 x 3000 mm - ø3 mm* 304 St. Steel 570598 720115 4
S116		**0.5" x 1.2" x 118" - ø0.12"** *13 x 30 x 3000 mm - ø3 mm* 304 St. Steel 570598 720116 1
S125		**0.3" x 0.9" x 110.25" - ø0.12"** *15 x 30 x 2800 mm - ø3 mm* 316 St. Steel 570598 610105 9
S126		**1.2" x 2.0" x 118" - ø0.15"** *30 x 50 x 3000 mm - ø4 mm* 304 St. Steel 570598 790126 9
S127		**1.2" x 3.0" x 118" - ø0.15"** *30 x 75 x 3000 mm - ø4 mm* 304 St. Steel 570598 790127 6
S128		**1.2" x 4.0" x 118" - ø0.15"** *30 x 100 x 3000 mm - ø4 mm* 304 St. Steel 570598 790128 3
S129		**1.2" x 5.0" x 118" - ø0.20"** *30 x 125 x 3000 mm - ø5 mm* 304 St. Steel 570598 790129 0
S130		**1.2" x 6.0" x 118" - ø0.20"** *30 x 150 x 3000 mm - ø5 mm* 304 St. Steel 570598 790130 6
S131		**1.2" x 10" x 118" - ø0.20"** *30 x 250 x 3000 mm - ø5 mm* 304 St. Steel 570598 790131 3
S132		**1.2" x 14" x 118" - ø0.20"** *30 x 350 x 3000 mm - ø5 mm* 304 St. Steel 570598 790132 0
S133		**1.2" x 18" x 118" - ø0.20"** *30 x 450 x 3000 mm - ø5 mm* 304 St. Steel 570598 790133 7

Distributed by Gross Automation | +1 (262) 252-1600 | sales@grossautomation.com

Heavy Duty Cable Trays

S235		**4.0" x 4.0" x 118" - ø0.20"** *100 x 100 x 3000 mm - ø5 mm* 316 St. Steel 570598 688235 4
S236		**4.0" x 8.0" x 118" - ø0.20"** *100 x 200 x 3000 mm - ø5 mm* 316 St. Steel 570598 688236 1
S237		**4.0" x 12.0" x 118" - ø0.20"** *100 x 300 x 3000 mm - ø5 mm* 316 St. Steel 570598 688237 8
S238		**4.0" x 16.0" x 118" - ø0.20"** *100 x 400 x 3000 mm - ø5 mm* 316 St. Steel 570598 688238 5
S239		**4.0" x 20.0" x 118" - ø0.20"** *100 x 500 x 3000 mm - ø5 mm* 316 St. Steel 570598 688239 2
S240		**4.0" x 24.0" x 118" - ø0.20"** *100 x 600 x 3000 mm - ø5 mm* 316 St. Steel 570598 688240 8
S428		**4.0" x 4.0" x 118" - ø0.20"** *100 x 100 x 3000 mm - ø5 mm* 304 St. Steel 570598 799428 5
S436		**4.0" x 8.0" x 118" - ø0.20"** *100 x 200 x 3000 mm - ø5 mm* 304 St. Steel 570598 799436 0
S437		**4.0" x 12.0" x 118" - ø0.20"** *100 x 300 x 3000 mm - ø5 mm* 304 St. Steel 570598 799437 7
S438		**4.0" x 16.0" x 118" - ø0.20"** *100 x 400 x 3000 mm - ø5 mm* 304 St. Steel 570598 799438 4

Single Cable Trays

S320		**0.2" x 0.2" x 118" - ø0.20"** *5 x 5 x 3000 mm* 316 St. Steel 570598 699320 3
S321		**0.2" x 0.2" x 118" - ø0.20"** *5 x 5 x 3000 mm* 316 St. Steel 570598 699321 0
S322		**0.3" x 0.3" x 118" - ø0.20"** *8 x 8 x 3000 mm* 316 St. Steel 570598 699322 7
S323		**0.4" x 0.4" x 118" - ø0.20"** *10 x 10 x 3000 mm* 316 St. Steel 570598 699323 4
S324		**0.5" x 0.5" x 118" - ø0.20"** *12 x 12 x 3000 mm* 316 St. Steel 570598 699324 1
S325		**0.6" x 0.6" x 118" - ø0.20"** *16 x 16 x 3000 mm* 316 St. Steel 570598 699325 8
S327		**1.1" x 1.1" x 118" - ø0.20"** *27 x 27 x 3000 mm* 316 St. Steel 570598 699327 2

Distributed by Gross Automation | +1 (262) 252-1600 | sales@grossautomation.com

SILTEC®

CABLE HYGIENE

Siltec USA, Inc.
6101 - 23rd Drive West, Suite B, Everett, WA 98203, USA
Phone (+1) 425.328.1006 . www.siltec.us / siltec@siltec.us

EHEDG
EUROPEAN HYGIENIC ENGINEERING & DESIGN GROUP
MEMBER SINCE 2017

DEALER:

www.lundtofte.dk - 04/2026 - US

Distributed by Gross Automation | +1 (262) 252-1600 | sales@grossautomation.com