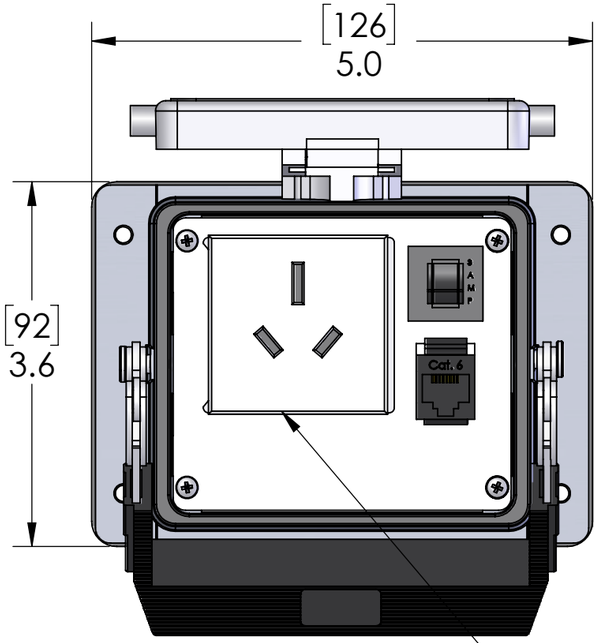

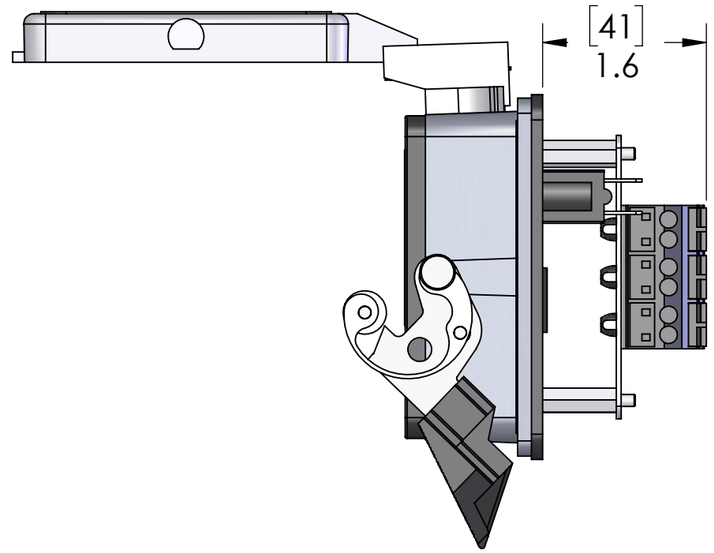

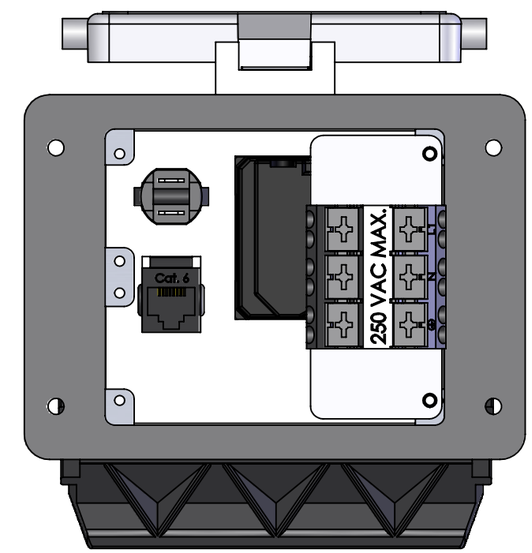

AUSTRALIAN (AS 3112-1981) RECEPTACLE,
ALSO USED IN CHINA

PANEL CUTOUT

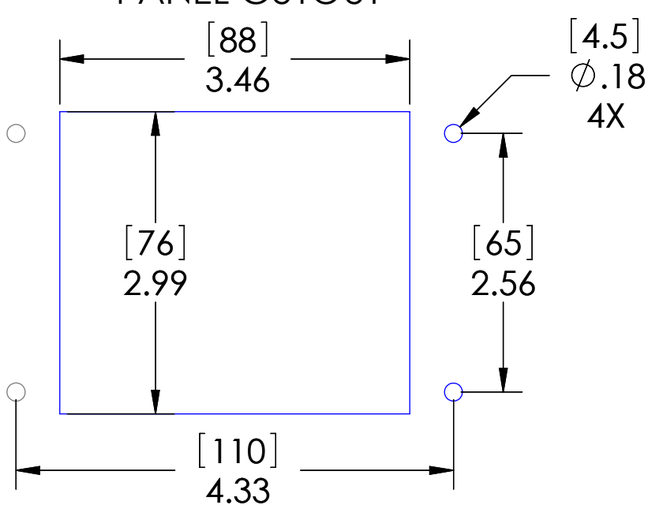

These devices shall be mounted on enclosures having adequate strength and thickness and with adequate spacing provided. Seal rating is based on mounting to a surface that is clean, flat and smooth.

PIC RATINGS/SPECIFICATIONS	
VOLTS:	250V
AMPS:	3A
SCCR:	0.2kA
NEMA/UL | EN 60529:	4, 4X, 12 | IP65
MOUNTING SCREW SIZE:	M4 (8-32) (304 or 316SS for 4X)
MOUNTING SCREW TORQUE:	1.2~1.8N-m (0.9~1.3 Lb-Ft)
INCOMING POWER WIRE SIZE:	0.5 ~ 4.0 sq mm / 20-12AWG
WIRE STRIP LENGTH:	10 ~ 11 mm

HOUSING MATERIALS	
BODY:	EPOXY COATED DIE CAST ALUMINUM
GASKET:	THERMOPLASTIC ELASTOMER
HANDLE:	POLYAMIDE
LEVERS:	STAINLESS STEEL

MOUNTING KIT ORDERED SEPARATELY CONTAINS M4x0.7 SS SCREW, NYLON WASHER, SPLIT LOCKWASHER AND M4 NUT
P/N: D-PIC-MT

STANDARD CONFIGURATIONS UNLESS OTHERWISE NOTED		
CONN. TYPE	EXTERIOR	INTERIOR
RJ45	CAT 6 JACK	CAT 6 JACK

PROPRIETARY AND CONFIDENTIAL
THE INFORMATION CONTAINED IN THIS DRAWING IS THE SOLE PROPERTY OF MENCOM CORPORATION. ANY REPRODUCTION IN PART OR AS A WHOLE WITHOUT THE WRITTEN PERMISSION OF MENCOM CORPORATION IS PROHIBITED.

UNLESS OTHERWISE SPECIFIED:
DIMENSIONS ARE IN INCHES
TOLERANCES:
FRACTIONAL ±1/64
ANGULAR: MACH ±5° BEND ±5°
TWO PLACE DECIMAL ±.01
THREE PLACE DECIMAL ±.004

MATERIAL
FINISH
DO NOT SCALE DRAWING

DRAWN BY	DCG
DRAWN DATE	04/10/2019
CHECKED BY	DCG
CHECK DATE	04/15/2019

COMMENTS:

MENCOM CORPORATION

TITLE:
AUSSIE RCP; RJ 8WIRE;3AMP

SIZE	DWG. NO.	REV
B	DAS-RJ45-R-32	C

SCALE: 2:3 | WEIGHT: | SHEET 1 OF 1