**NOTE: TO INSTALL OR RELEASE THE BAR:**
**1. EXERT A SLIGHT DOWNWARD PRESSURE ON THE PIC LEVER TO RELIEVE THE TENSION ON THE SPRING LATCHES.**
**2. SLIDE THE BAR INTO THE SLOTS NEXT TO THE LATCHES. THE BAR WILL SLIDE FREELY IN OR OUT.**

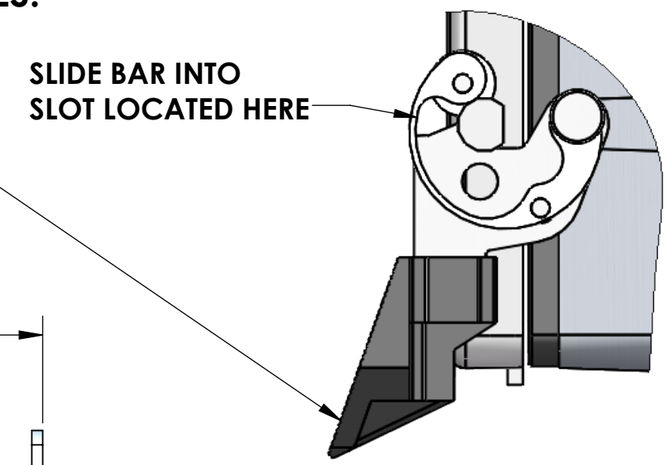


PIC HOUSING NOT INCLUDED

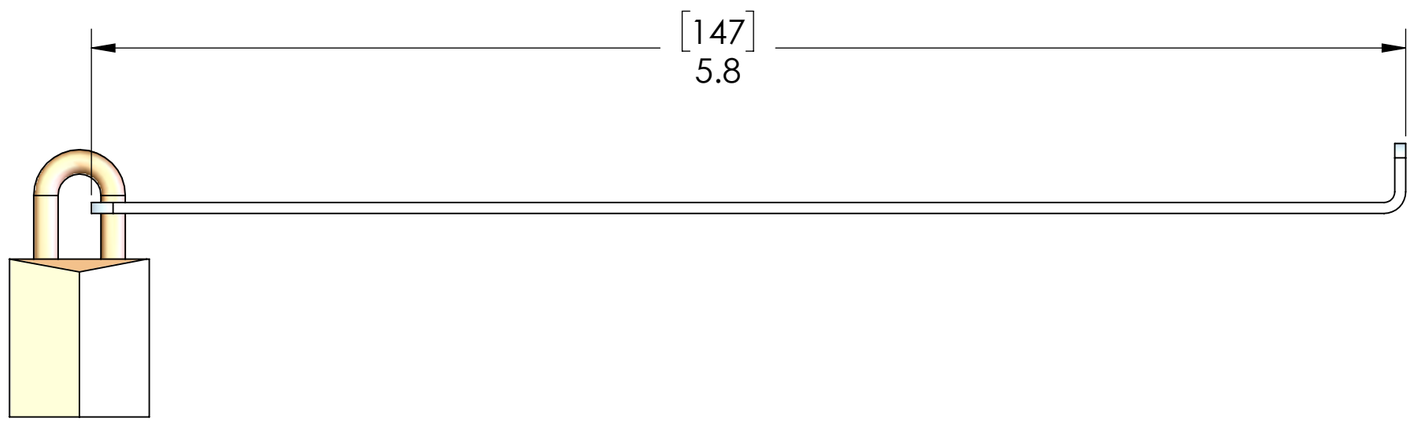


PART CONSISTS OF A BRACKET, LOCK AND KEY.

**PROPRIETARY AND CONFIDENTIAL**
THE INFORMATION CONTAINED IN THIS DRAWING IS THE SOLE PROPERTY OF MENCOM CORPORATION. ANY REPRODUCTION IN PART OR AS A WHOLE WITHOUT THE WRITTEN PERMISSION OF MENCOM CORPORATION IS PROHIBITED.

UNLESS OTHERWISE SPECIFIED:
DIMENSIONS ARE IN INCHES AND [MM]

MATERIAL

FINISH

DO NOT SCALE DRAWING

| | |
|---|---|
| DRAWN BY | DCG |
| DRAWN DATE | 09/13/2018 |
| CHECKED BY | JJH |
| CHECK DATE | 09/13/2018 |

COMMENTS:

MENCOM CORPORATION

TITLE:
LOCK KIT FOR PIC SIZE 24

| SIZE | DWG. NO. | REV |
|---|---|---|
| B | D-PIC-LOCK-24 | A |

SCALE: 3:2 | WEIGHT: | SHEET 1 OF 1