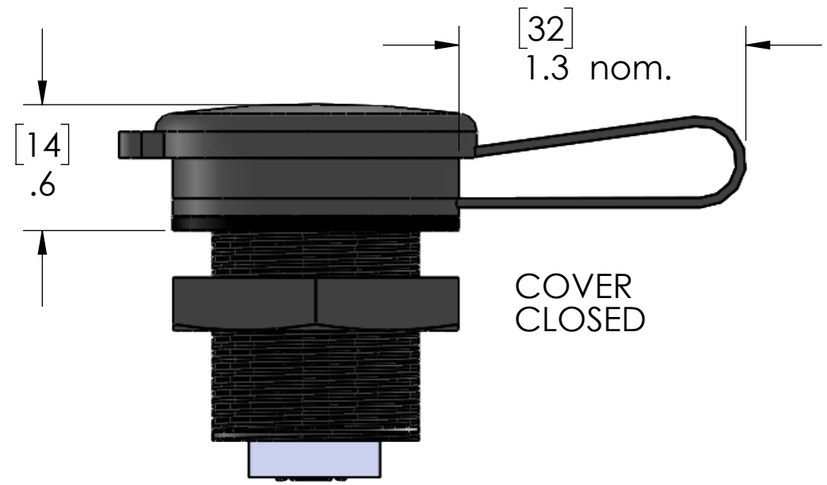

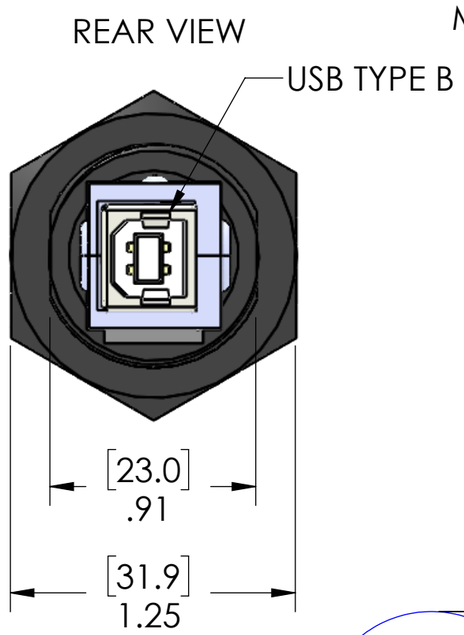

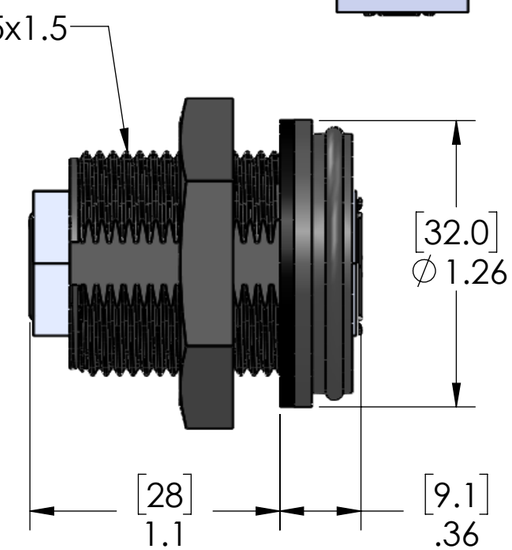

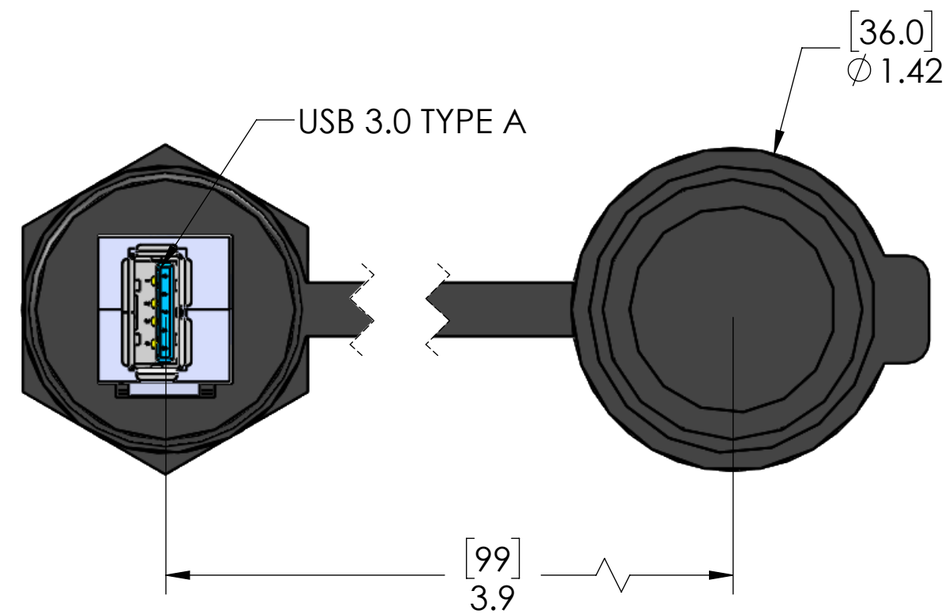

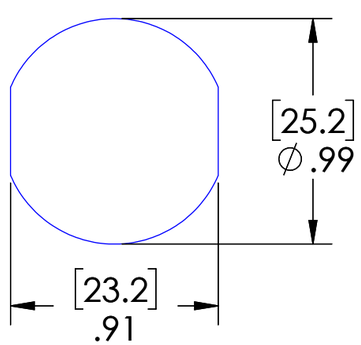

SUGGESTED CUTOUT

MATERIALS:	
BODY & CAP:	BLACK POLYPROPYLENE
GASKET:	TPE
CONNECTOR:	USB-A 3.0 FEM - USB-B 2.0 FEM
LOCKNUT:	POLYAMIDE
CERTIFICATIONS:	
SEAL:	UL TYPE 12
	IP65 & 69
US:	UL LISTED
CANADA:	c-UL LISTED

PROPRIETARY AND CONFIDENTIAL

THE INFORMATION CONTAINED IN THIS DRAWING IS THE SOLE PROPERTY OF MENCOM CORPORATION. ANY REPRODUCTION IN PART OR AS A WHOLE WITHOUT THE WRITTEN PERMISSION OF MENCOM CORPORATION IS PROHIBITED.

UNLESS OTHERWISE SPECIFIED:

DIMENSIONS ARE IN INCHES AND [MM]

MATERIAL

FINISH

DO NOT SCALE DRAWING

DRAWN BY	ADM
DRAWN DATE	09/22/2016
CHECKED BY	
CHECK DATE	

COMMENTS:

MENCOM CORPORATION

TITLE:

USB A TO USB B PASSTHROUGH

SIZE	DWG. NO.	REV
B	D-USB-AFBF-M25-PA	B

SCALE: 3:2 | WEIGHT: | SHEET 1 OF 1