REVISIONS			
REV.	DESCRIPTION	DATE	APPROVED
A	DRAWN IN SW	2/2/2016	BEM

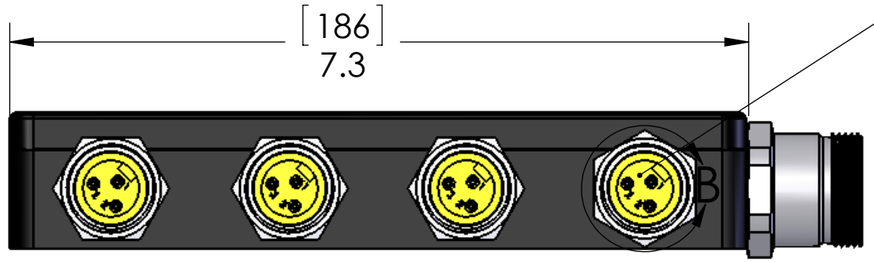

FEMALE CONNECTOR (8X)

DETAIL B
SCALE 2 : 1.5

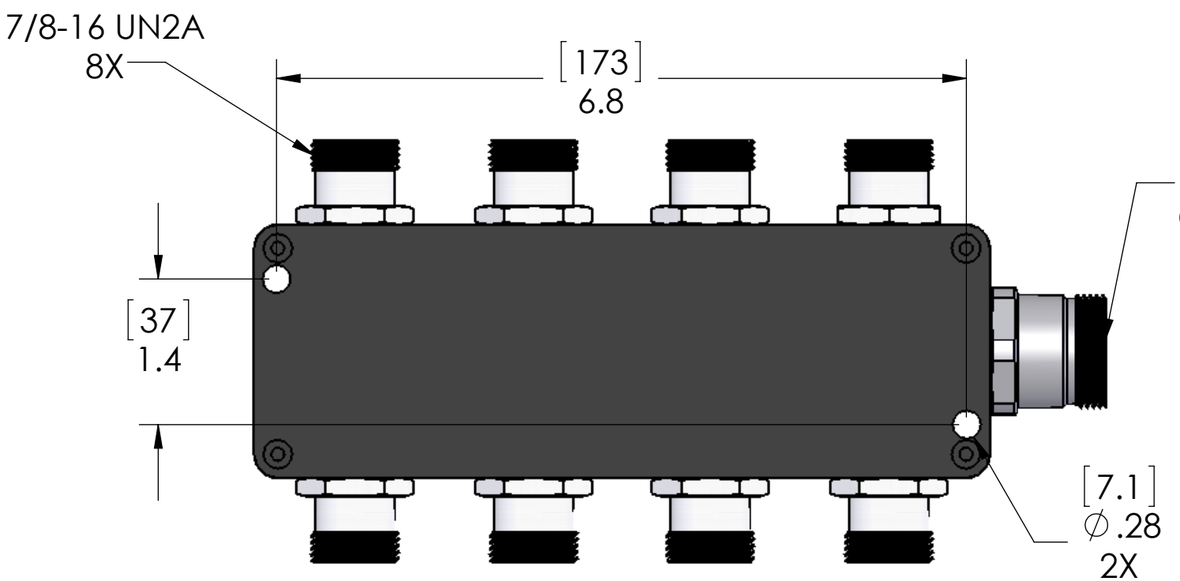

MALE CONNECTOR

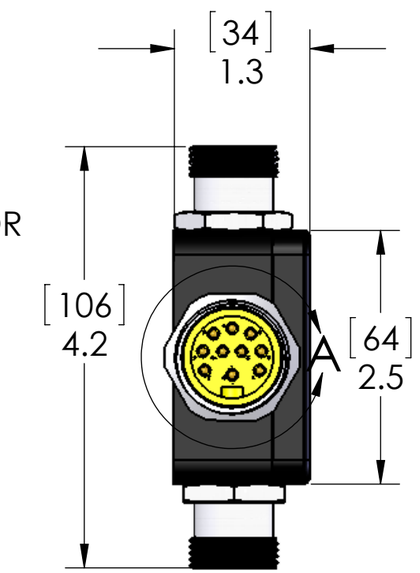

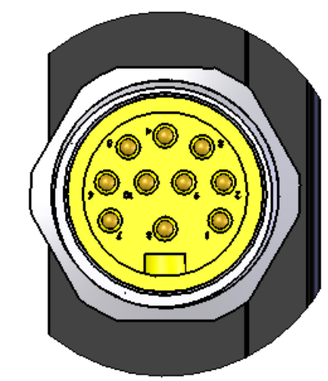

DETAIL A
SCALE 2 : 1.5

ORIENTATION OF ALL INSERTS AS SHOWN

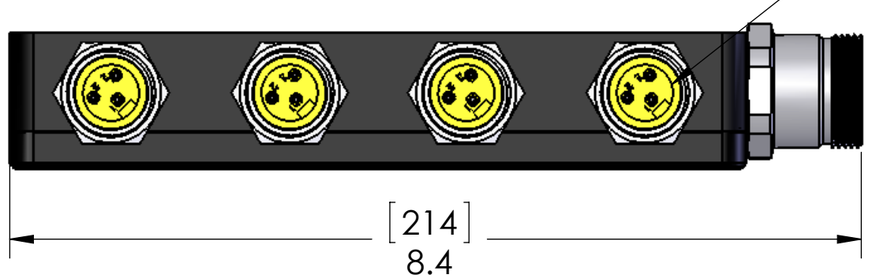

PROPRIETARY AND CONFIDENTIAL

THE INFORMATION CONTAINED IN THIS DRAWING IS THE SOLE PROPERTY OF MENCOM CORPORATION. ANY REPRODUCTION IN PART OR AS A WHOLE WITHOUT THE WRITTEN PERMISSION OF MENCOM CORPORATION IS PROHIBITED.

UNLESS OTHERWISE SPECIFIED:

DIMENSIONS ARE IN INCHES
TOLERANCES:
FRACTIONAL ±1/64
ANGULAR: MACH ±5° BEND ±5°
TWO PLACE DECIMAL ±.01
THREE PLACE DECIMAL ±.004

MATERIAL

FINISH

DO NOT SCALE DRAWING

	NAME
DRAWN	JJH
CHECKED	
ENG APPR.	
MFG APPR.	
Q.A.	

COMMENTS:

MENCOM CORPORATION

TITLE:

SIZE	DWG. NO.	REV
B	JIN-830-010-M000	A

SCALE: 1:1.5 WEIGHT: SHEET 1 OF 2

WIRING								
MIN-10 PIN	PORT 1	PORT 2	PORT 3	PORT 4	PORT 5	PORT 6	PORT 7	PORT 8
PIN 1 - ORANGE		PIN 2						
PIN 2 - BLUE				PIN 2				
PIN 3 - WHITE/BLK					PIN 2			
PIN 4 - RED/BLK						PIN 2		
PIN 5 - GREEN/BLK							PIN 2	
PIN 6 - ORG/BLK								PIN 2
PIN 7 - RED	PIN 2							
PIN 8 - GRN/YEL	PIN 1	PIN 1	PIN 1	PIN 1	PIN 1	PIN 1	PIN 1	PIN 1
PIN 9 - BLACK			PIN 2					
PIN 10 - WHITE	PIN 3	PIN 3	PIN 3	PIN 3	PIN 3	PIN 3	PIN 3	PIN 3

SPECIFICATIONS:	
MATERIALS:	
BODY:	ZINC DIECAST WITH BLACK EPOXY COAT
RECEPTACLE SHELLS:	CLEAR ANODIZED ALUMINUM
RECEPTACLE INSERTS:	YELLOW PVC
CONTACTS:	GOLD PLATED COPPER ALLOY

RATINGS:	
AMPS:	5.5 AMPS TOTAL (LIMITED BY MATING CABLE)
VOLTS:	300V
SEAL:	IP67

PROPRIETARY AND CONFIDENTIAL

THE INFORMATION CONTAINED IN THIS DRAWING IS THE SOLE PROPERTY OF MENCOM CORPORATION. ANY REPRODUCTION IN PART OR AS A WHOLE WITHOUT THE WRITTEN PERMISSION OF MENCOM CORPORATION IS PROHIBITED.

UNLESS OTHERWISE SPECIFIED:

DIMENSIONS ARE IN INCHES
TOLERANCES:
FRACTIONAL ±1/64
ANGULAR: MACH ±5° BEND ±5°
TWO PLACE DECIMAL ±.01
THREE PLACE DECIMAL ±.004

MATERIAL

FINISH

DO NOT SCALE DRAWING

	NAME
DRAWN	JJH
CHECKED	
ENG APPR.	
MFG APPR.	
Q.A.	

COMMENTS:

MENCOM CORPORATION

TITLE:

SIZE	DWG. NO.	REV
B	JIN-830-010-M000	A

SCALE: 1:1.5 WEIGHT: SHEET 2 OF 2