PIN #	COLOR
1	BROWN
2	BLUE

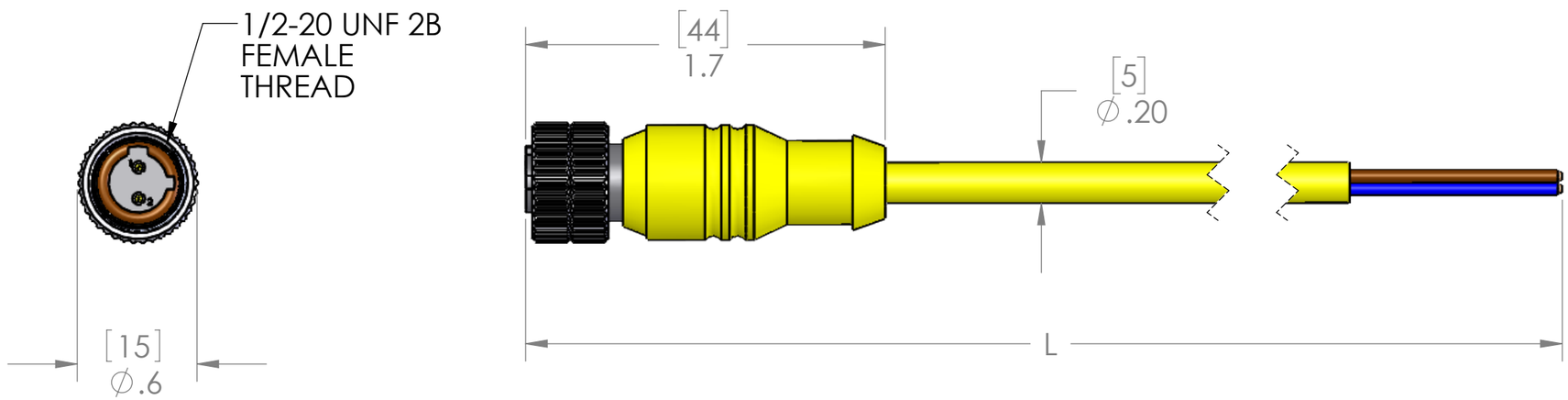

P/N	L	STD?
MAC-2FP-1M	40" [1m]	YES
MAC-2FP-2M	79" [2m]	YES
MAC-2FP-3M	118" [3m]	NO
MAC-2FP-4M	157" [4m]	NO
MAC-2FP-5M	197" [5m]	YES
MAC-2FP-6M	236" [6m]	NO
MAC-2FP-8M	315" [8m]	NO
MAC-2FP-10M	393" [10m]	YES
MAC-2FP-15M	591" [15m]	YES
MAC-2FP-20M	787" [20m]	NO
MAC-2FP-30M	1181" [30m]	NO
MAC-2FP-50M	1968" [50m]	NO

PARTS LISTED AS BEING NOT STANDARD
MAY REQUIRE MINIMUM ORDERS

MATERIALS	
BODY:	YELLOW PVC
CONTACTS:	GOLD PLATED COPPER ALLOY
CABLE:	
STYLE:	AWM
AWG:	22 AWG
JACKET:	YELLOW PVC
VOLTAGE:	600V
SHIELD:	NO
COUPLING:	NICKEL PLATED BRASS
INSERT:	POLYAMIDE
O-RING:	FPM
APPROVALS	
US:	UL LISTED
CANADA:	C-UL LISTED
ROHS:	YES
CE & UKCA:	YES
RATINGS	
PROTECTION CLASS:	UL TYPE 4 & 12, IEC IP69

PROPRIETARY AND CONFIDENTIAL
THE INFORMATION CONTAINED IN THIS DRAWING IS THE SOLE PROPERTY OF MENCOM CORPORATION. ANY REPRODUCTION IN PART OR AS A WHOLE WITHOUT THE WRITTEN PERMISSION OF MENCOM CORPORATION IS PROHIBITED.

VOLTS	300V
AMPS	4A
TEMP:	105°C

UNLESS OTHERWISE SPECIFIED:
DIMENSIONS ARE IN INCHES AND [MM]

MATERIAL
FINISH
DO NOT SCALE DRAWING

DRAWN BY	ADM
DRAWN DATE	07/27/2023
CHECKED BY	JJH
CHECK DATE	07/28/2023

COMMENTS:

MENCOM CORPORATION

TITLE:

SIZE	DWG. NO.	REV
B	MAC-2FP-ZZ	B
SCALE: 1.5:1	WEIGHT:	SHEET 1 OF 1