PIN #	COLOR
1	BROWN
2	BLUE

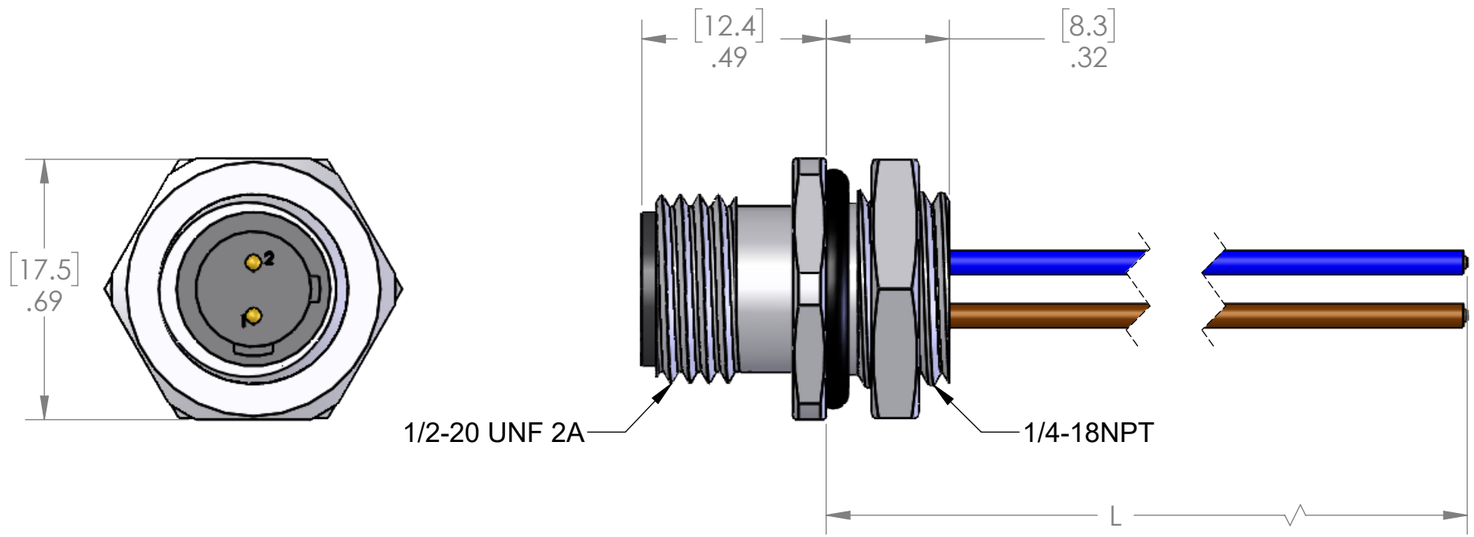

P/N	L
MAC-2MR-4	12" [0.3m]
MAC-2MR-4-0.5M	20" [0.5m]
MAC-2MR-4-0.6M	24" [0.6m]
MAC-2MR-4-1M	40" [1.0m]
MAC-2MR-4-2M	79" [2.0m]
MAC-2MR-4-3M	118" [3.0m]
MAC-2MR-4-4M	157" [4.0m]
MAC-2MR-4-5M	193" [5.0m]
MAC-2MR-4-6M	236" [6.0m]

OTHER LENGTHS AVAILABLE
PLEASE CONSULT FACTORY

MATERIALS	
SHELL:	NICKEL PLATED BRASS
CONTACTS:	GOLD PLATED COPPER ALLOY
WIRES:	
STYLE:	UL 1007/1569
AWG:	22 AWG
JACKET:	PVC
VOLTAGE:	300V
INSERT:	POLYAMIDE
O-RING:	NBR
NUT:	ZINC PLATED STEEL
APPROVALS	
US:	UL LISTED
CANADA:	C-UL LISTED
ROHS:	YES
CE & UKCA:	YES
RATINGS	
PROTECTION CLASS:	UL TYPE 4 & 12, IEC IP69

PROPRIETARY AND CONFIDENTIAL

THE INFORMATION CONTAINED IN THIS DRAWING IS THE SOLE PROPERTY OF MENCOM CORPORATION. ANY REPRODUCTION IN PART OR AS A WHOLE WITHOUT THE WRITTEN PERMISSION OF MENCOM CORPORATION IS PROHIBITED.

VOLTS	300V
AMPS	4A
TEMP:	105°C

UNLESS OTHERWISE SPECIFIED:

DIMENSIONS ARE IN INCHES AND [MM]

MATERIAL

FINISH

DO NOT SCALE DRAWING

DRAWN BY	ADM
DRAWN DATE	07/28/2023
CHECKED BY	JJH
CHECK DATE	07/28/2023

COMMENTS:

MENCOM CORPORATION

TITLE:

SIZE	DWG. NO.	REV
B	MAC-2MR-4-ZZ	B

SCALE: 2.5:1 WEIGHT: SHEET 1 OF 1