REVISIONS			
REV.	DESCRIPTION	DATE	APPROVED
A	REDRAWN IN SW	8/1/2005	
B	REVISED	8/31/2016	

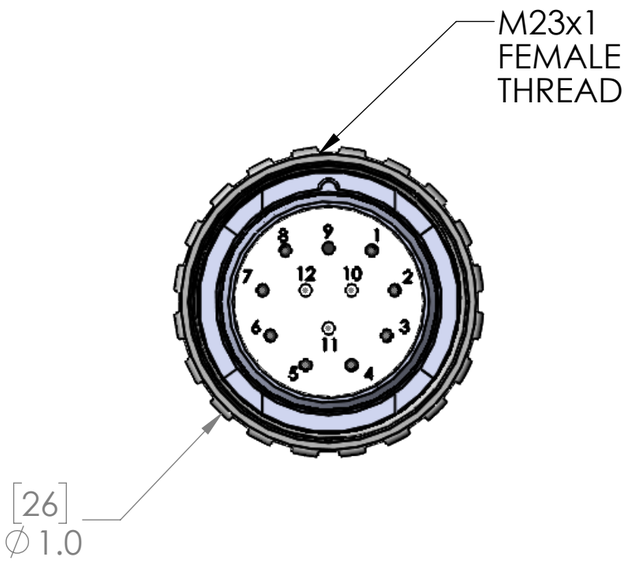

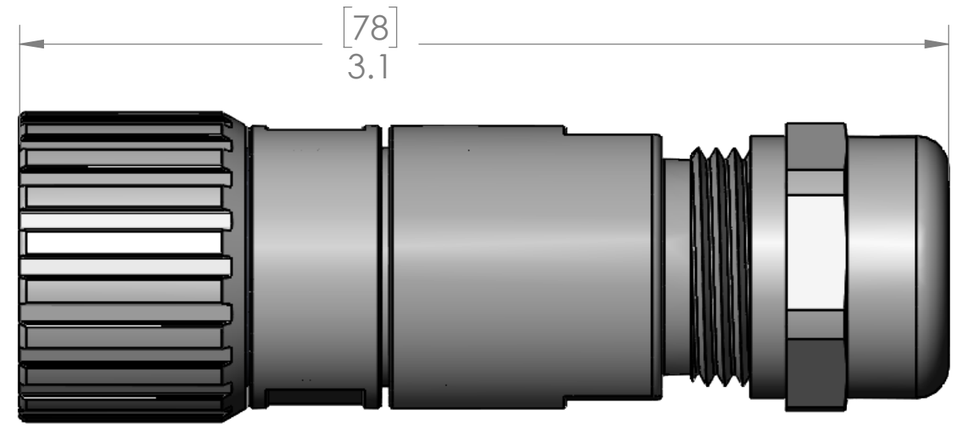

CONNECTION MADE VIA CRIMP CONTACTS (ORDERED SEPARATELY)
[CONTACT P/Ns: 18 - 20AWG: MCV-PIN-C-18
20 - 24AWG: MCV-PIN-C

MATERIALS:	
BODY:	NICKEL PLATED BRASS
SEALS:	NBR
GLAND:	NICKEL PLATED BRASS
RATINGS:	
VOLTS:	150V
AMPS:	4A
TEMP:	-40°C (static) - +125°C
WIRE AWG:	18AWG - 24AWG
CABLE DIA.:	0.236 - 0.472" [6-12mm]

PROPRIETARY AND CONFIDENTIAL
THE INFORMATION CONTAINED IN THIS DRAWING IS THE SOLE PROPERTY OF MENCOM CORPORATION. ANY REPRODUCTION IN PART OR AS A WHOLE WITHOUT THE WRITTEN PERMISSION OF MENCOM CORPORATION IS PROHIBITED.

UNLESS OTHERWISE SPECIFIED:
DIMENSIONS ARE IN INCHES AND [MM]
MATERIAL
FINISH
DO NOT SCALE DRAWING

	NAME
DRAWN	BEM
CHECKED	
ENG APPR.	
MFG APPR.	
Q.A.	
COMMENTS:	

MENCOM CORPORATION

TITLE:

12 PL ML MCV SLDR CUP

SIZE	DWG. NO.	REV
B	MCV-12MP-FW-CC	B

SCALE: 2:1 | WEIGHT: | SHEET 1 OF 1