REVISIONS			
REV.	DESCRIPTION	DATE	APPROVED
A	REDRAWN IN SW	8/6/2010	

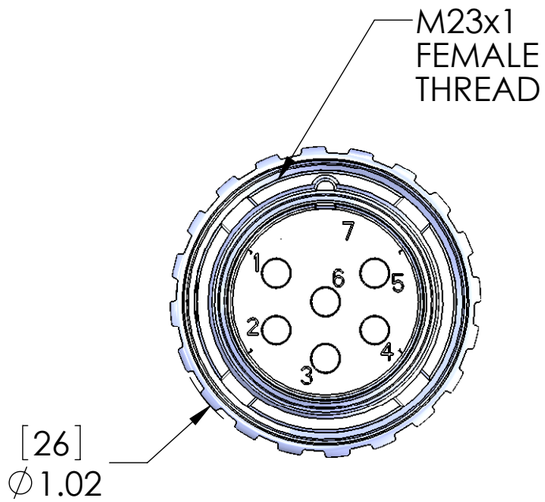

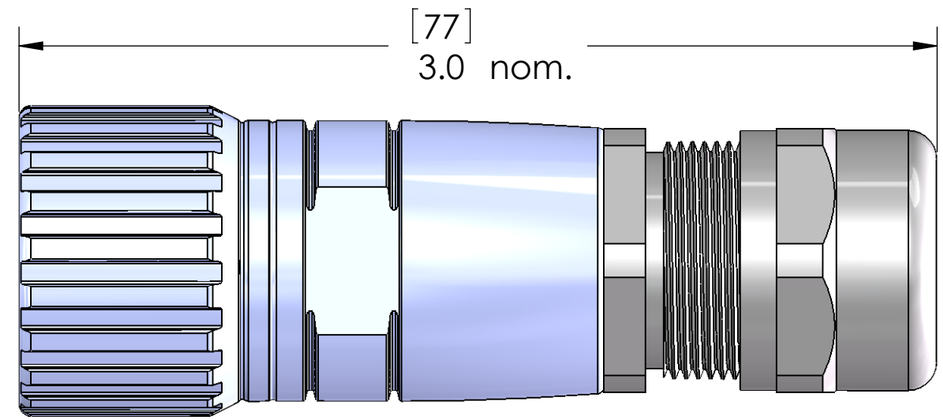

CONNECTION MADE VIA CRIMP CONTACTS (ORDERED SEPARATELY)
[CONTACT P/Ns: 14 - 16AWG: MCV-6MR-PIN-14
18 - 20AWG: MCV-6MR-PIN-18
14 - 16AWG GROUND PIN: MCV-6MR-M14-G

CRIMP TOOLS: CCPZ-MIL + MCTP-V6 (locator)
REMOVAL TOOL: MCV6ES

RATINGS:	
AMPS:	20A Max (AWG dependent)
VOLTS:	300V Max (Cable dependent)
SEAL:	IP 67 when fully mated
CABLE RANGE:	5 - 13mm

MATERIALS:	
BODY:	NICKEL PLATED BRASS
SEALS:	NBR
LOCKNUT:	NICKEL PLATED BRASS

PROPRIETARY AND CONFIDENTIAL
THE INFORMATION CONTAINED IN THIS DRAWING IS THE SOLE PROPERTY OF MENCOM CORPORATION. ANY REPRODUCTION IN PART OR AS A WHOLE WITHOUT THE WRITTEN PERMISSION OF MENCOM CORPORATION IS PROHIBITED.

UNLESS OTHERWISE SPECIFIED:
DIMENSIONS ARE IN INCHES AND [MM]
MATERIAL
FINISH
DO NOT SCALE DRAWING

	NAME
DRAWN	CAM
CHECKED	
ENG APPR.	
MFG APPR.	
Q.A.	
COMMENTS:	

MENCOM CORPORATION
TITLE:

SIZE	DWG. NO.	REV
B	MCV-6MP-FW-CC	A
SCALE: 2:1	WEIGHT:	SHEET 1 OF 1