PIN #	COLOR
1	WHITE
2	BROWN
3	GREEN
4	YELLOW
5	GRAY
6	PINK
7	BLUE
8	RED
9	ORANGE
10	TAN
11	BLACK
12	VIOLET

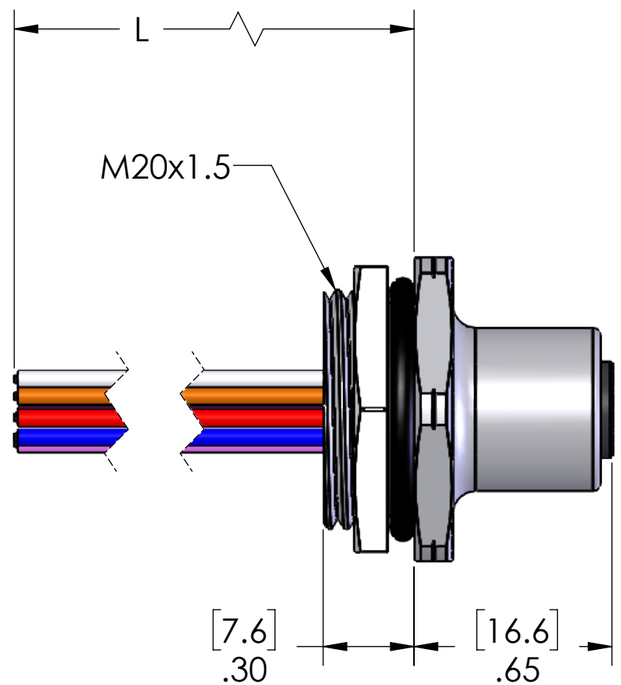

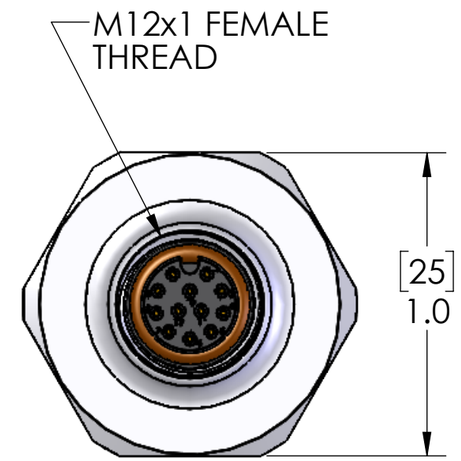

P/N	L
MDC-12FR-M20	12" [0.3m]
MDC-12FR-M20-0.5M	20" [0.5m]
MDC-12FR-M20-1M	40" [1m]
MDC-12FR-M20-2M	79" [2m]
MDC-12FR-M20-3M	118" [3m]
MDC-12FR-M20-5M	197" [5m]

OTHER LENGTHS AVAILABLE,
PLEASE CONSULT FACTORY

MATERIALS	
SHELL:	ANODIZED ALUMINUM
CONTACTS:	GOLD PLATED COPPER ALLOY
WIRES:	
STYLE:	UL1007/1569
AWG:	24 AWG
JACKET:	PVC
VOLTAGE:	300V
INSERT:	POLYAMIDE
O-RING:	FPM & NBR
NUT:	NICKEL PLATED BRASS
APPROVALS	
US:	UL LISTED
CANADA:	C-UL LISTED
ROHS:	YES
CE & UKCA:	YES
RATINGS	
PROTECTION CLASS:	IEC IP69

PROPRIETARY AND CONFIDENTIAL

THE INFORMATION CONTAINED IN THIS DRAWING IS THE SOLE PROPERTY OF MENCOM CORPORATION. ANY REPRODUCTION IN PART OR AS A WHOLE WITHOUT THE WRITTEN PERMISSION OF MENCOM CORPORATION IS PROHIBITED.

VOLTS	30V
AMPS	2A
TEMP:	105°C

UNLESS OTHERWISE SPECIFIED:

DIMENSIONS ARE IN INCHES AND [MM]

MATERIAL

FINISH

DO NOT SCALE DRAWING

DRAWN BY	JJH
DRAWN DATE	03/14/2023
CHECKED BY	ADM
CHECK DATE	10/18/2018

COMMENTS:

MENCOM CORPORATION

TITLE:

12 PL FM M20 RECP

SIZE	DWG. NO.	REV
B	MDC-12FR-M20-ZZ	A
SCALE: 2:1	WEIGHT:	SHEET 1 OF 1