REVISIONS			
REV.	DESCRIPTION	DATE	APPROVED
A	REDRAWN IN SW	5/14/2002	

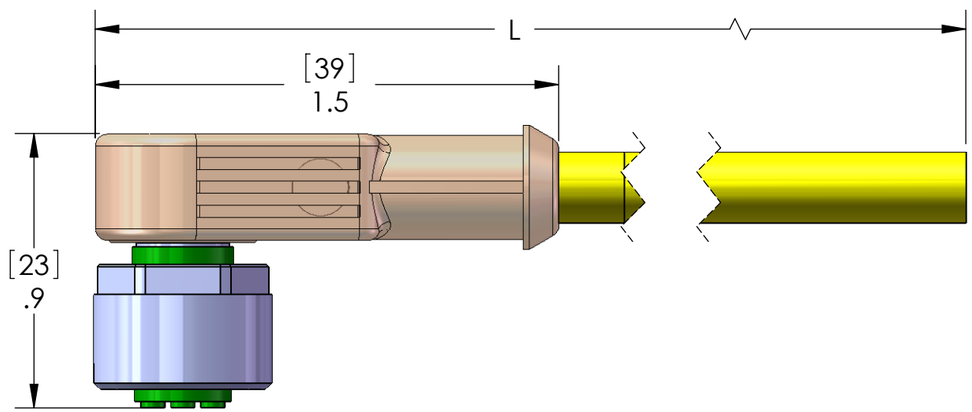

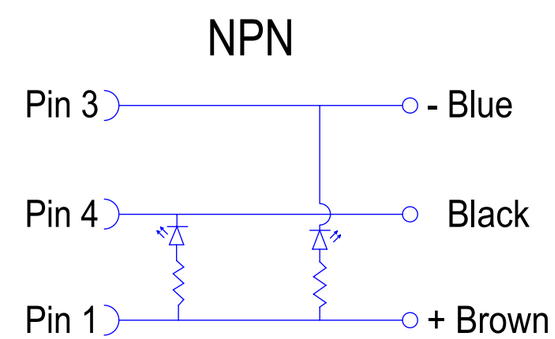

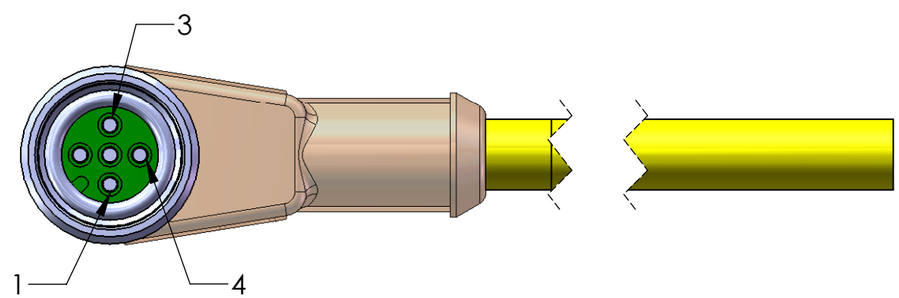

P/N	L
MDC-3FP-2M-R-NPN	2M
MDC-3FP-5M-R-NPN	5M
MDC-3FP-10M-R-NPN	10M

MATERIALS	
BODY:	TRANSLUCENT PUR
CONTACTS:	GOLD PLATED COPPER ALLOY
CABLE:	22/3, YELLOW PVC JACKET
COUPLING:	NICKEL PLATED ZINC
INSERT:	PUR
O-RING:	BUNA-N

PROPRIETARY AND CONFIDENTIAL
THE INFORMATION CONTAINED IN THIS DRAWING IS THE SOLE PROPERTY OF MENCOM CORPORATION. ANY REPRODUCTION IN PART OR AS A WHOLE WITHOUT THE WRITTEN PERMISSION OF MENCOM CORPORATION IS PROHIBITED.

UNLESS OTHERWISE SPECIFIED:
DIMENSIONS ARE IN INCHES AND [MM]
MATERIAL
FINISH
DO NOT SCALE DRAWING

	NAME
DRAWN	DWM
CHECKED	
ENG APPR.	
MFG APPR.	
Q.A.	

COMMENTS:

MENCOM CORPORATION

TITLE:

SIZE B | DWG. NO. MDC-3FP-ZZ-R-NPN | REV A

SCALE: 2:1 | WEIGHT: | SHEET 1 OF 1