PIN #	COLOR
1	BROWN
2	WHITE
3	BLUE
4	BLACK
5	GRAY

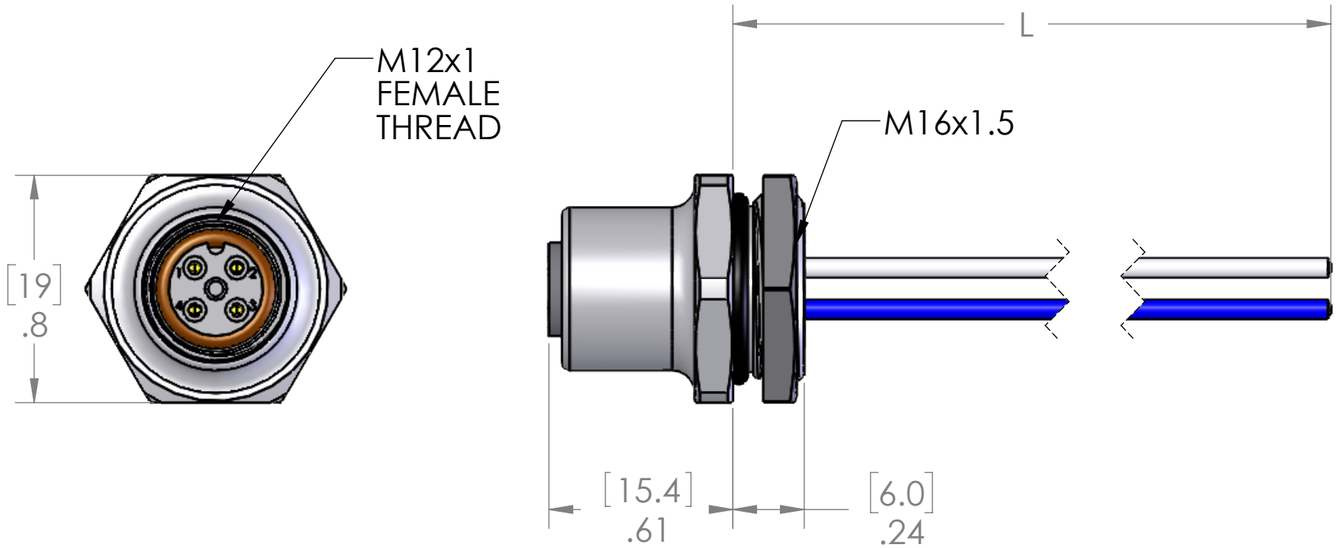

P/N	L
MDC-4FR-M16	12" [0.3M]
MDC-4FR-M16-0.5M	20" [0.5M]
MDC-4FR-M16-0.6M	24" [0.5M]
MDC-4FR-M16-1M	40" [1M]
MDC-4FR-M16-2M	79" [2M]
MDC-4FR-M16-3M	118" [3M]
MDC-4FR-M16-5M	197" [5M]

OTHER LENGTHS AVAILABLE
CONSULT FACTORY

MATERIALS	
SHELL:	NICKEL PLATED BRASS
CONTACTS:	GOLD PLATED COPPER ALLOY
WIRES:	
STYLE:	UL 1007/1569
AWG:	22/4
JACKET:	PVC
VOLTAGE:	300V
INSERT:	POLYAMIDE
O-RING:	NBR & FPM
NUT:	NICKEL PLATED BRASS
APPROVALS	
US:	UL LISTED
CANADA:	C-UL LISTED
ROHS:	YES
CE:	YES
RATINGS	
PROTECTION CLASS:	UL TYPE 4 & 12, IEC IP69

PROPRIETARY AND CONFIDENTIAL

THE INFORMATION CONTAINED IN THIS DRAWING IS THE SOLE PROPERTY OF MENCOM CORPORATION. ANY REPRODUCTION IN PART OR AS A WHOLE WITHOUT THE WRITTEN PERMISSION OF MENCOM CORPORATION IS PROHIBITED.

VOLTS	300V
AMPS	4A
TEMP:	105°C

UNLESS OTHERWISE SPECIFIED:

DIMENSIONS ARE IN INCHES AND [MM]

MATERIAL

FINISH

DO NOT SCALE DRAWING

DRAWN BY	ADM
DRAWN DATE	11/02/2021
CHECKED BY	JJH
CHECK DATE	11/02/2021

COMMENTS:

MENCOM CORPORATION

TITLE:

4 PL MDC FM M16 RECP

SIZE	DWG. NO.	REV
B	MDC-4FR-M16-ZZ	D

SCALE: 2:1 WEIGHT: SHEET 1 OF 1