PIN #	COLOR
1	BROWN
2	WHITE
3	BLUE
4	BLACK
5	GRAY

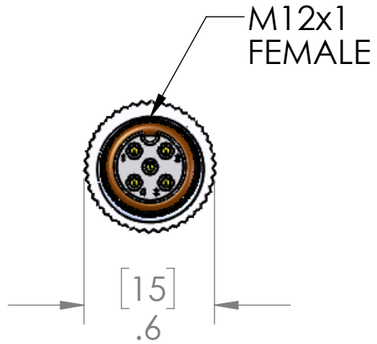

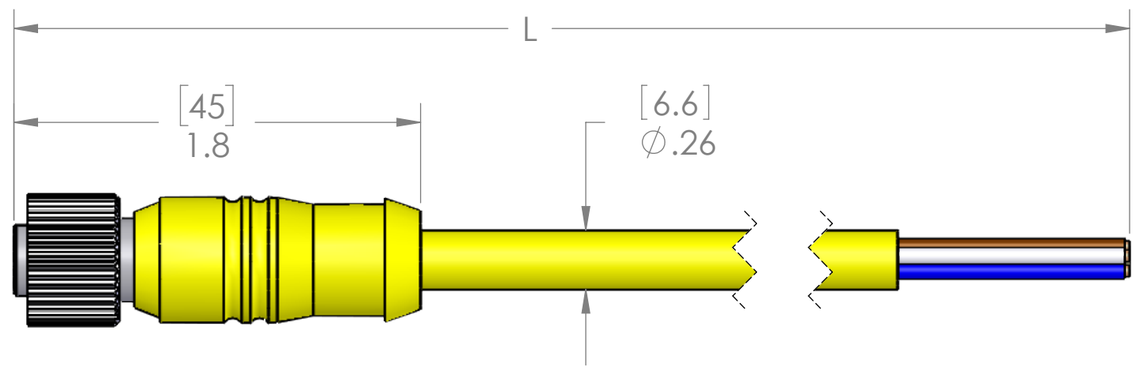

P/N	L	STD?
MDC-5FPX-1M	40" [1m]	YES
MDC-5FPX-2M	79" [2m]	YES
MDC-5FPX-3M	118" [3m]	NO
MDC-5FPX-4M	157" [4m]	YES
MDC-5FPX-5M	197" [5m]	YES
MDC-5FPX-6M	236" [6m]	NO
MDC-5FPX-8M	315" [8m]	NO
MDC-5FPX-10M	393" [10m]	YES
MDC-5FPX-15M	590" [15m]	NO
MDC-5FPX-20M	786" [20m]	NO
MDC-5FPX-30M	1179" [30m]	NO
MDC-5FPX-50M	1968" [50m]	NO

PARTS LISTED AS NOT BEING STANDARD
MAY HAVE MINIMUM ORDER QUANTITIES

MATERIALS	
BODY:	YELLOW PVC
CONTACTS:	GOLD PLATED COPPER ALLOY
CABLE:	
STYLE:	AWM
AWG:	18/5
JACKET:	YELLOW PVC
VOLTAGE:	600V
SHIELD:	NO
COUPLING:	NICKEL PLATED BRASS
INSERT:	POLYAMIDE
O-RING:	FPM
APPROVALS	
US:	UL LISTED
CANADA:	C-UL LISTED
ROHS:	YES
CE:	YES
RATINGS	
PROTECTION CLASS:	UL TYPE 4 & 12, IEC IP69

PROPRIETARY AND CONFIDENTIAL
THE INFORMATION CONTAINED IN THIS DRAWING IS THE SOLE PROPERTY OF MENCOM CORPORATION. ANY REPRODUCTION IN PART OR AS A WHOLE WITHOUT THE WRITTEN PERMISSION OF MENCOM CORPORATION IS PROHIBITED.

VOLTS	300V
AMPS	4A
TEMP:	105°C

UNLESS OTHERWISE SPECIFIED:
DIMENSIONS ARE IN INCHES AND [MM]

MATERIAL
FINISH
DO NOT SCALE DRAWING

DRAWN BY	ADM
DRAWN DATE	08/18/2021
CHECKED BY	JJH
CHECK DATE	08/18/2021

COMMENTS:

MENCOM CORPORATION

TITLE:
5 PL MDC FEM PLG
18AWG

SIZE	DWG. NO.	REV
B	MDC-5FPX-ZZ	B

SCALE: 1.5:1 WEIGHT: SHEET 1 OF 1