PIN #	COLOR
1	GRAY (SHIELD)
2	RED (V+)
3	BLACK (V-)
4	WHITE (CAN_H)
5	BLUE (CAN_L)

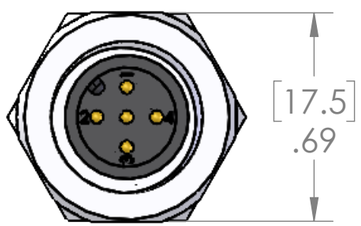

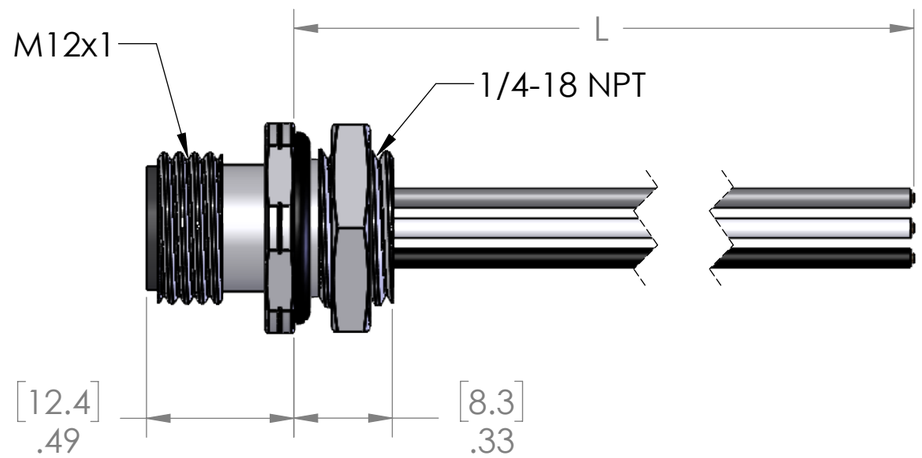

TABLE A	
P/N	L
MDC-5MR-4-22-DN	12" [0.3m]
MDC-5MR-4-0.5M-22-DN	20" [0.5m]
MDC-5MR-4-1M-22-DN	40" [1m]
MDC-5MR-4-2M-22-DN	79" [2m]
MDC-5MR-4-3M-22-DN	118" [3m]
MDC-5MR-4-5M-22-DN	197" [5m]
MDC-5MR-4-10M-22-DN	393" [10m]

OTHER LENGTHS ARE AVAILABLE
PLEASE CONSULT FACTORY

MATERIALS	
SHELL:	NICKEL PLATED BRASS
CONTACTS:	GOLD PLATED COPPER ALLOY
WIRES:	
STYLE:	UL 1007/1569
AWG:	22 AWG
JACKET:	PVC
VOLTAGE:	300V
INSERT:	POLYAMIDE
O-RING:	NBR
NUT:	ZINC PLATED STEEL
APPROVALS	
US:	UL LISTED
CANADA:	C-UL LISTED
ROHS:	YES
CE & UKCA:	YES
RATINGS	
PROTECTION CLASS:	UL TYPE 4 & 12, IEC IP69

PROPRIETARY AND CONFIDENTIAL
THE INFORMATION CONTAINED IN THIS DRAWING IS THE SOLE PROPERTY OF MENCOM CORPORATION. ANY REPRODUCTION IN PART OR AS A WHOLE WITHOUT THE WRITTEN PERMISSION OF MENCOM CORPORATION IS PROHIBITED.

VOLTS	300V
AMPS	4A
TEMP:	105°C

UNLESS OTHERWISE SPECIFIED:
DIMENSIONS ARE IN INCHES AND [MM]

MATERIAL
FINISH
DO NOT SCALE DRAWING

DRAWN BY	ADM
DRAWN DATE	08/25/2023
CHECKED BY	JJH
CHECK DATE	08/28/2023

COMMENTS:

MENCOM CORPORATION

TITLE:

SIZE	DWG. NO.	REV
B	MDC-5MR-4-ZZ-22-DN	B
SCALE: 2:1	WEIGHT:	SHEET 1 OF 1