PIN #	COLOR
1	BROWN
2	WHITE
3	BLUE
4	BLACK
5	GRAY

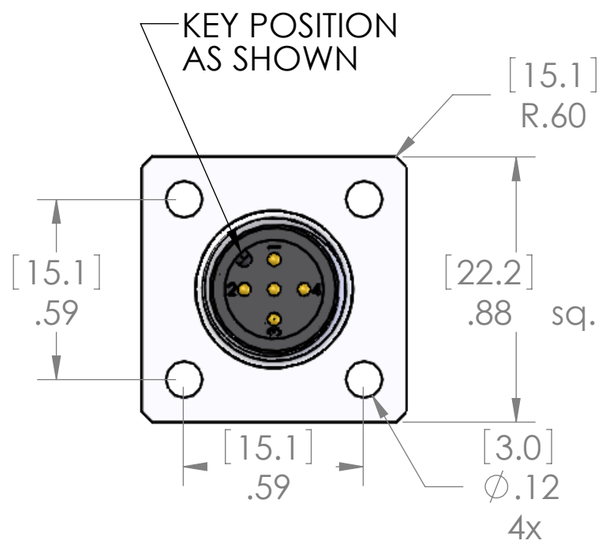

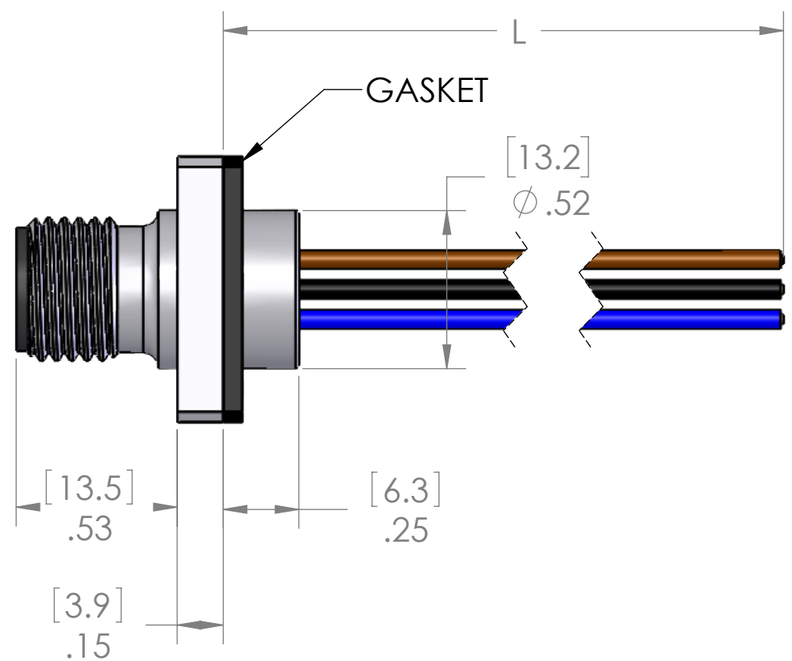

TABLE A	
P/N	L
MDC-5MR-PM	12" [0.3m]
MDC-5MR-PM-0.5M	20" [0.5m]
MDC-5MR-PM-0.6M	24" [0.6m]
MDC-5MR-PM-1M	40" [1m]
MDC-5MR-PM-2M	79" [2m]
MDC-5MR-PM-3M	118" [3m]
MDC-5MR-PM-5M	197" [5m]
MDC-5MR-PM-10M	393" [10m]

OTHER LENGTHS ARE AVAILABLE
PLEASE CONSULT FACTORY

MATERIALS	
SHELL:	NICKEL PLATED BRASS
CONTACTS:	GOLD PLATED COPPER ALLOY
WIRES:	
STYLE:	UL 1007/1569
AWG:	22 AWG
JACKET:	PVC
VOLTAGE:	300V
INSERT:	POLYAMIDE
GASKET:	NBR
NUT:	N/A
APPROVALS	
US:	UL LISTED
CANADA:	C-UL LISTED
ROHS:	YES
CE & UKCA:	YES
RATINGS	
PROTECTION CLASS:	UL TYPE 4 & 12, IEC IP69

PROPRIETARY AND CONFIDENTIAL

THE INFORMATION CONTAINED IN THIS DRAWING IS THE SOLE PROPERTY OF MENCOM CORPORATION. ANY REPRODUCTION IN PART OR AS A WHOLE WITHOUT THE WRITTEN PERMISSION OF MENCOM CORPORATION IS PROHIBITED.

VOLTS	300V
AMPS	4A
TEMP:	105°C

UNLESS OTHERWISE SPECIFIED:

DIMENSIONS ARE IN INCHES AND [MM]

MATERIAL

FINISH

DO NOT SCALE DRAWING

DRAWN BY	ADM
DRAWN DATE	07/07/2023
CHECKED BY	JJH
CHECK DATE	07/10/2023

COMMENTS:

MENCOM CORPORATION

TITLE:

5 PL MDC PNL MT RECP

SIZE B | DWG. NO. MDC-5MR-PM-ZZ | REV B

SCALE: 2:1 | WEIGHT: | SHEET 1 OF 1