PIN #	COLOR
1	BROWN
2	WHITE
3	BLUE
4	BLACK
5	GRAY
6	PINK
7	NOT USED
8	NOT USED

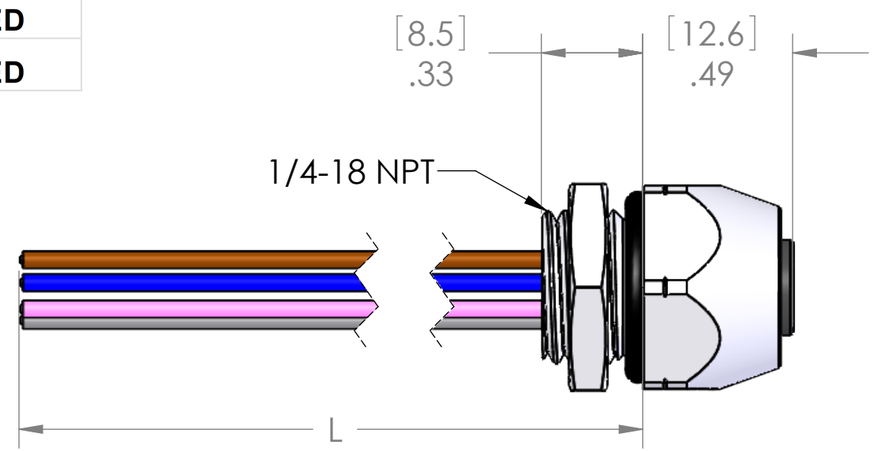

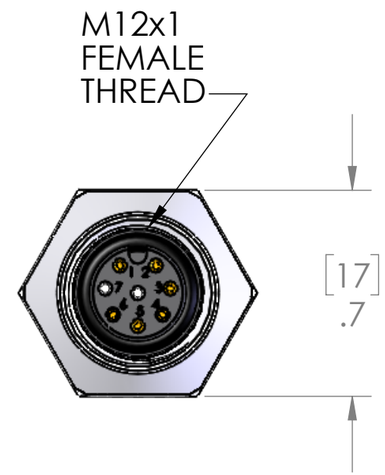

TABLE A	
P/N	L
MDC-6FR-4-SS	12" [0.3m]
MDC-6FR-4-0.5M-SS	20" [0.5m]
MDC-6FR-4-0.6M-SS	24" [0.6m]
MDC-6FR-4-1M-SS	40" [1m]
MDC-6FR-4-2M-SS	79" [2m]
MDC-6FR-4-3M-SS	118' [3m]
MDC-6FR-4-5M-SS	197" [5m]
MDC-6FR-4-10M-SS	393" [10m]

OTHER LENGTHS AVAILABLE
PLEASE CONSULT FACTORY

MATERIALS	
SHELL:	STAINLESS STEEL
CONTACTS:	GOLD PLATED COPPER ALLOY
WIRES:	
STYLE:	UL 1007/1569
AWG:	24 AWG
JACKET:	PVC
VOLTAGE:	300V
INSERT:	POLYAMIDE
O-RING:	NBR & FPM
NUT:	ZINC PLATED STEEL
APPROVALS	
US:	UL LISTED
CANADA:	C-UL LISTED
ROHS:	YES
CE & UKCA:	YES
RATINGS	
PROTECTION CLASS:	UL TYPE 4 & 12, IEC IP69

PROPRIETARY AND CONFIDENTIAL

THE INFORMATION CONTAINED IN THIS DRAWING IS THE SOLE PROPERTY OF MENCOM CORPORATION. ANY REPRODUCTION IN PART OR AS A WHOLE WITHOUT THE WRITTEN PERMISSION OF MENCOM CORPORATION IS PROHIBITED.

VOLTS	60V
AMPS	2A
TEMP:	105°C

UNLESS OTHERWISE SPECIFIED:

DIMENSIONS ARE IN INCHES AND [MM]

MATERIAL

FINISH

DO NOT SCALE DRAWING

DRAWN BY	ADM
DRAWN DATE	07/10/2023
CHECKED BY	JJH
CHECK DATE	07/10/2023

COMMENTS:

MENCOM CORPORATION

TITLE:

SIZE	DWG. NO.	REV
B	MDC-6FR-4-ZZ-SS	B

SCALE: 2:1 WEIGHT: SHEET 1 OF 1