PIN #	COLOR
1	DRAIN (SHIELD)
2	RED (V+)
3	BLACK (V-)
4	WHITE (CAN_H)
5	BLUE (CAN_L)

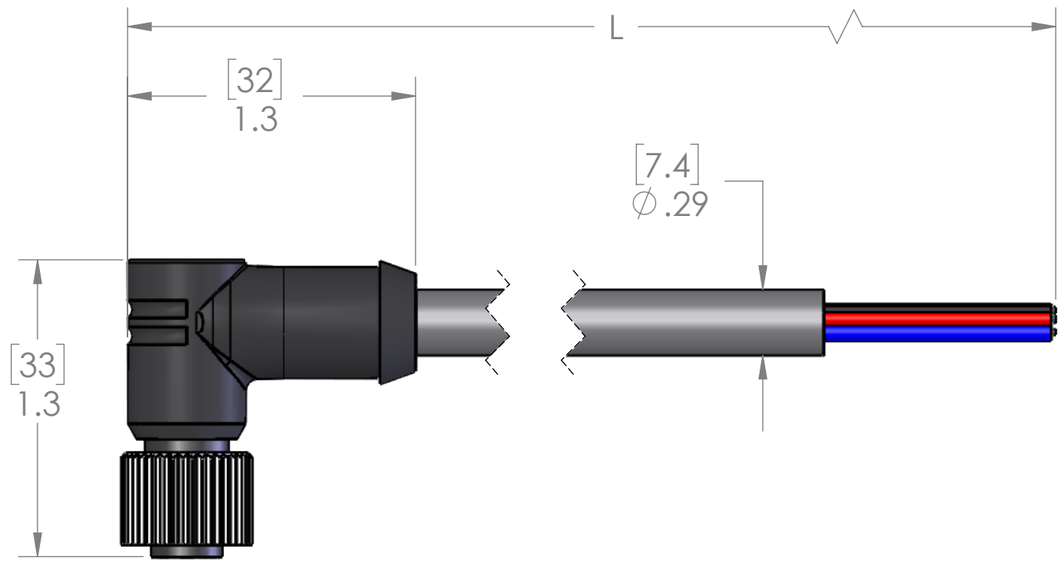

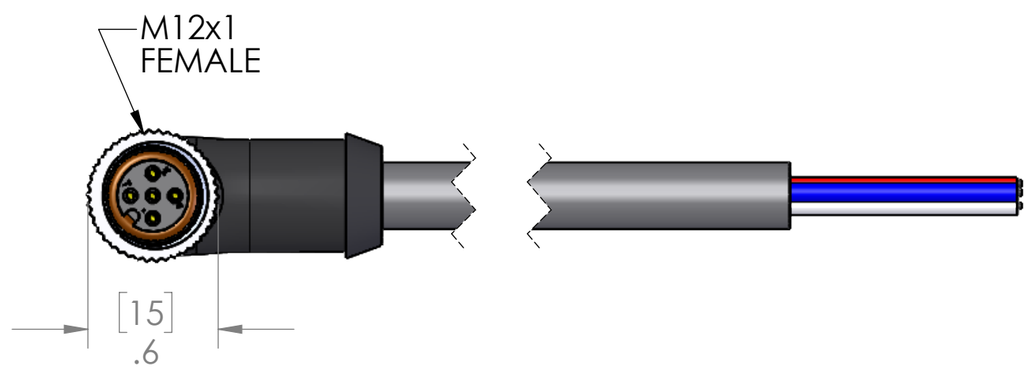

TABLE A		
P/N	L	STD?
MDCDD-5FP-1M-R	40" [1m]	YES
MDCDD-5FP-2M-R	79" [2m]	YES
MDCDD-5FP-3M-R	118" [3m]	NO
MDCDD-5FP-4M-R	157" [4m]	NO
MDCDD-5FP-5M-R	197" [5m]	YES
MDCDD-5FP-6M-R	236" [6m]	NO
MDCDD-5FP-8M-R	315" [8m]	NO
MDCDD-5FP-10M-R	393" [10m]	YES
MDCDD-5FP-15M-R	590" [15m]	YES
MDCDD-5FP-20M-R	786" [20m]	NO

PARTS LISTED AS NOT BEING STANDARD
MAY HAVE MINIMUM ORDER QUANTITIES

MATERIALS	
BODY:	BLACK PVC
CONTACTS:	GOLD PLATED COPPER ALLOY
CABLE:	
STYLE:	AWM DEVICENET DROP THIN
AWG:	24/2, 22/2
JACKET:	GRAY PVC
VOLTAGE:	600V
SHIELD:	BRAIDED W/DRAIN
COUPLING:	NICKEL PLATED BRASS
INSERT:	POLYAMIDE
O-RING:	FPM
APPROVALS	
US:	UL LISTED
CANADA:	C-UL LISTED
ROHS:	YES
CE & UKCA:	YES
RATINGS	
PROTECTION CLASS:	UL TYPE 4 & 12, IEC IP69

PROPRIETARY AND CONFIDENTIAL

THE INFORMATION CONTAINED IN THIS DRAWING IS THE SOLE PROPERTY OF MENCOM CORPORATION. ANY REPRODUCTION IN PART OR AS A WHOLE WITHOUT THE WRITTEN PERMISSION OF MENCOM CORPORATION IS PROHIBITED.

VOLTS	300V
AMPS	4A
TEMP:	80°C

UNLESS OTHERWISE SPECIFIED:

DIMENSIONS ARE IN INCHES AND [MM]

MATERIAL

FINISH

DO NOT SCALE DRAWING

DRAWN BY	ADM
DRAWN DATE	08/28/2023
CHECKED BY	JJH
CHECK DATE	08/29/2023

COMMENTS:

MENCOM CORPORATION

TITLE:

5 POL MDC FEM PLUG
R/A

SIZE	DWG. NO.	REV
B	MDCDD-5FP-ZZ-R	B

SCALE: 3:2 WEIGHT: SHEET 1 OF 1