MIN		MDC
PIN #		PIN #
1	-----	1
2	-----	3
3	-----	4

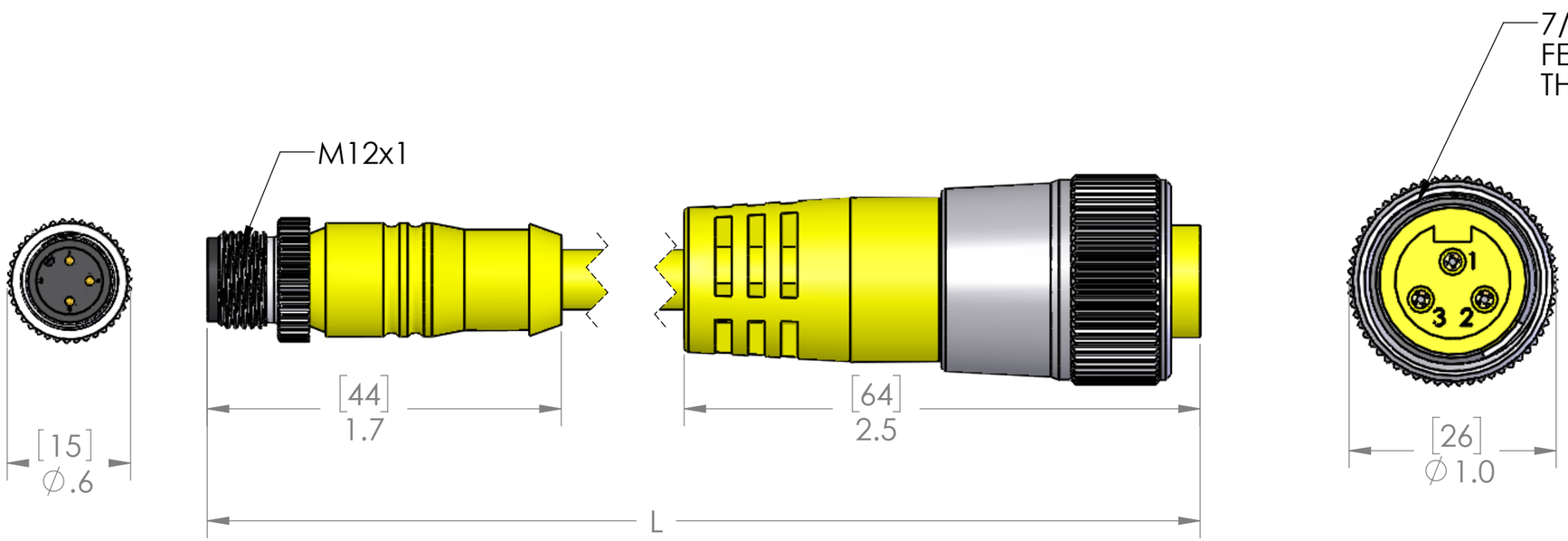

P/N	L	STD?
MDCIN-3MFPX-0.5M	20"[0.5M]	NO
MDCIN-3MFPX-1M	40" [1M]	YES
MDCIN-3MFPX-2M	79" [2M]	YES
MDCIN-3MFPX-3M	118" [3M]	NO
MDCIN-3MFPX-4M	157" [4M]	NO
MDCIN-3MFPX-5M	197" [5M]	YES
MDCIN-3MFPX-10M	393" [10M]	YES
MDCIN-3MFPX-20M	786" [20M]	NO
MDCIN-3MFPX-30M	1179" [30M]	NO

PARTS LISTED AS NOT BEING STANDARD
MAY HAVE MINIMUM ORDER QUANTITIES

MATERIALS	
BODY:	YELLOW PVC
CONTACTS:	GOLD PLATED COPPER ALLOY
CABLE:	
STYLE:	AWM
AWG:	18 AWG
JACKET:	YELLOW PVC
VOLTAGE:	600V
SHIELD:	NO
COUPLING:	NICKEL PLATED BRASS
INSERT:	POLYAMIDE & YELLOW PVC
O-RING:	N/A
RATINGS	
PROTECTION CLASS:	UL TYPE 4 & 12, IEC IP69

PROPRIETARY AND CONFIDENTIAL

THE INFORMATION CONTAINED IN THIS DRAWING IS THE SOLE PROPERTY OF MENCOM CORPORATION. ANY REPRODUCTION IN PART OR AS A WHOLE WITHOUT THE WRITTEN PERMISSION OF MENCOM CORPORATION IS PROHIBITED.

VOLTS	300V
AMPS	4A
TEMP:	105°C

UNLESS OTHERWISE SPECIFIED:

DIMENSIONS ARE IN INCHES AND [MM]

MATERIAL

FINISH

DO NOT SCALE DRAWING

DRAWN BY	ADM
DRAWN DATE	08/28/2023
CHECKED BY	JJH
CHECK DATE	08/29/2023

COMMENTS:

MENCOM CORPORATION

TITLE:

SIZE	DWG. NO.	REV
B	MDCIN-3MFPX-ZZ	C
SCALE: 3:2	WEIGHT:	SHEET 1 OF 1