PIN #	COLOR
1	GRAY (SHIELD)
2	RED (V+)
3	BLACK (V-)
4	WHITE (CAN_H)
5	BLUE (CAN_L)

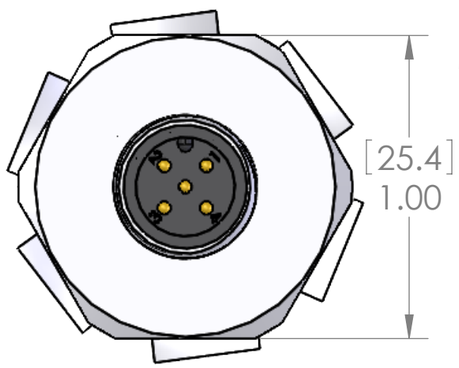

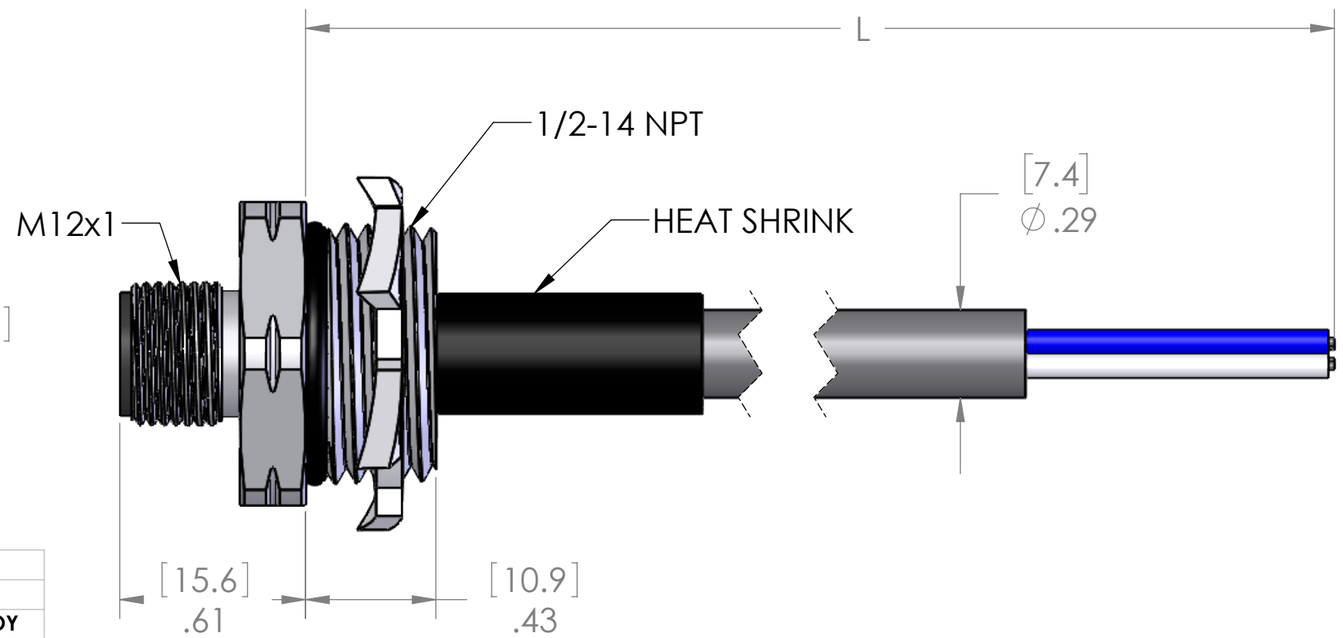

MATERIALS	
SHELL:	ANODIZED ALUMINUM
CONTACTS:	GOLD PLATED COPPER ALLOY
CABLE:	
STYLE:	AWM DEVICENET DROP THIN
AWG:	24/2, 22/2
JACKET:	GRAY PVC
VOLTAGE:	600V
SHIELD:	BRAIDED W/DRAIN
INSERT:	POLYAMIDE
O-RING:	NBR
NUT:	ZINC PLATED STEEL
HEATSHRINK:	POLYOLEFIN
APPROVALS	
US:	UL LISTED
CANADA:	C-UL LISTED
ROHS:	YES
CE & UKCA:	YES
RATINGS	
PROTECTION CLASS:	UL TYPE 4 & 12, IEC IP69

TABLE A	
P/N	L
MDCDD-5MR-2	12" [0.3M]
MDCDD-5MR-2-0.5M	20" [0.5M]
MDCDD-5MR-2-1M	40" [1M]
MDCDD-5MR-2-2M	79" [2M]
MDCDD-5MR-2-5M	197" [5M]
MDCDD-5MR-2-10M	393" [10M]

OTHER LENGTHS ARE AVAILABLE
PLEASE CONSULT FACTORY

PROPRIETARY AND CONFIDENTIAL

THE INFORMATION CONTAINED IN THIS DRAWING IS THE SOLE PROPERTY OF MENCOM CORPORATION. ANY REPRODUCTION IN PART OR AS A WHOLE WITHOUT THE WRITTEN PERMISSION OF MENCOM CORPORATION IS PROHIBITED.

VOLTS	300V
AMPS	4A
TEMP:	80°C

UNLESS OTHERWISE SPECIFIED:

DIMENSIONS ARE IN INCHES AND [MM]

MATERIAL

FINISH

DO NOT SCALE DRAWING

DRAWN BY	ADM
DRAWN DATE	08/28/2023
CHECKED BY	JJH
CHECK DATE	08/29/2023

COMMENTS:

MENCOM CORPORATION

TITLE:

SIZE	DWG. NO.	REV
B	MDCDD-5MR-2-ZZ	B

SCALE: 2:1 WEIGHT: SHEET 1 OF 1