MDC PIN #	Wiring	MIN PIN #
1	----------	2
2	----------	N/A
3	----------	3
4	----------	1

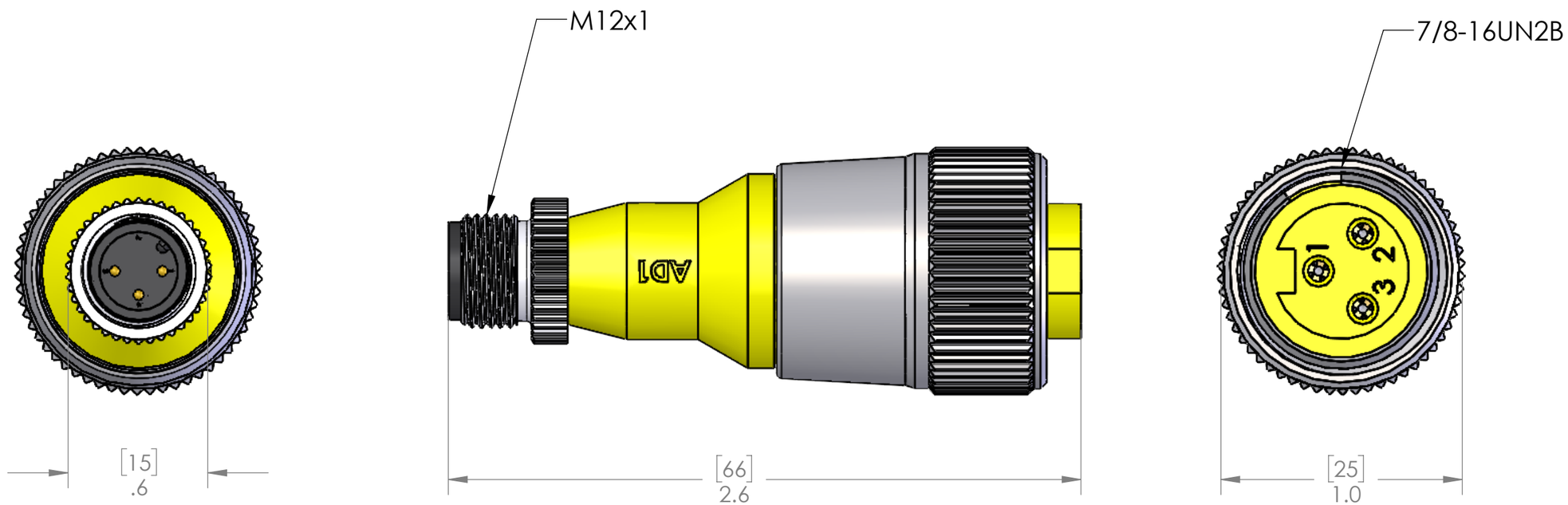

MATERIALS	
BODY:	YELLOW PVC
CONTACTS:	GOLD PLATED COPPER ALLOY
WIRES:	
STYLE:	UL 1007/1569
AWG:	18 AWG
JACKET:	PVC
VOLTAGE:	300V
COUPLING:	NICKEL PLATED BRASS
INSERTS:	POLYAMIDE & YELLOW PVC
O-RING:	N/A
RATINGS	
PROTECTION CLASS:	UL TYPE 4 & 12, IEC IP69

PROPRIETARY AND CONFIDENTIAL
THE INFORMATION CONTAINED IN THIS DRAWING IS THE SOLE PROPERTY OF MENCOM CORPORATION. ANY REPRODUCTION IN PART OR AS A WHOLE WITHOUT THE WRITTEN PERMISSION OF MENCOM CORPORATION IS PROHIBITED.

VOLTS	300V
AMPS	4A
TEMP:	105°C

UNLESS OTHERWISE SPECIFIED:
DIMENSIONS ARE IN INCHES AND [MM]

MATERIAL
FINISH
DO NOT SCALE DRAWING

DRAWN BY	JJH
DRAWN DATE	08/28/2023
CHECKED BY	JJH
CHECK DATE	08/29/2023

COMMENTS:

MENCOM CORPORATION

TITLE:

SIZE	DWG. NO.	REV
B	MDCIN-3MFP-AD1	C
SCALE: 1:1	WEIGHT:	SHEET 1 OF 1