PIN #	COLOR
1	BROWN
2	WHITE
3	BLUE
4	BLACK
5	GRAY
6	PINK

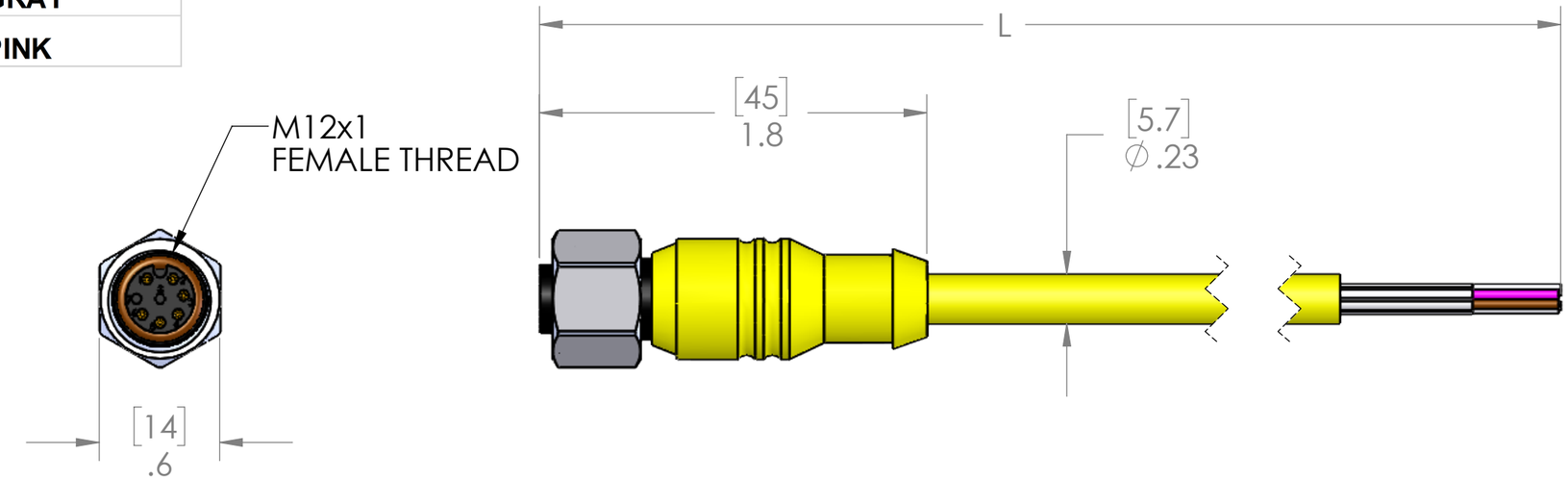

P/N	L	STD?
MDCM-6FP-1M-SS	40" [1M]	YES
MDCM-6FP-2M-SS	79" [2M]	YES
MDCM-6FP-3M-SS	118" [3M]	YES
MDCM-6FP-4M-SS	157" [4M]	YES
MDCM-6FP-5M-SS	197" [5M]	YES
MDCM-6FP-6M-SS	236" [6M]	NO
MDCM-6FP-8M-SS	315" [8M]	NO
MDCM-6FP-10M-SS	393" [10M]	YES
MDCM-6FP-15M-SS	591" [15M]	NO
MDCM-6FP-20M-SS	787" [20M]	NO
MDCM-6FP-30M-SS	1181" [30M]	NO

PARTS LISTED AS NOT BEING STANDARD
MAY HAVE MINIMUM ORDER QUANTITIES

MATERIALS	
BODY:	YELLOW PVC
CONTACTS:	GOLD PLATED COPPER ALLOY
CABLE:	
STYLE:	AWM
AWG:	24/6
JACKET:	YELLOW PVC
VOLTAGE:	300V
SHIELD:	MYLAR W/DRAIN
COUPLING:	STAINLESS STEEL
INSERT:	POLYAMIDE
O-RING:	FPM
APPROVALS	
US:	UL LISTED
CANADA:	C-UL LISTED
ROHS:	YES
CE:	YES
RATINGS	
PROTECTION CLASS:	UL TYPE 4 & 12, IEC IP69

PROPRIETARY AND CONFIDENTIAL

THE INFORMATION CONTAINED IN THIS DRAWING IS THE SOLE PROPERTY OF MENCOM CORPORATION. ANY REPRODUCTION IN PART OR AS A WHOLE WITHOUT THE WRITTEN PERMISSION OF MENCOM CORPORATION IS PROHIBITED.

VOLTS	60V
AMPS	2A
TEMP:	105°C

UNLESS OTHERWISE SPECIFIED:

DIMENSIONS ARE IN INCHES AND [MM]

MATERIAL

FINISH

DO NOT SCALE DRAWING

DRAWN BY	GO
DRAWN DATE	09/16/2021
CHECKED BY	JJH
CHECK DATE	09/17/2021

COMMENTS:

MENCOM CORPORATION

TITLE:

SIZE	DWG. NO.	REV
B	MDCM-6FP-ZZ-SS	B

SCALE: 1.5:1 WEIGHT: SHEET 1 OF 1