PIN #	COLOR
1	BROWN
2	WHITE
3	BLUE
4	BLACK

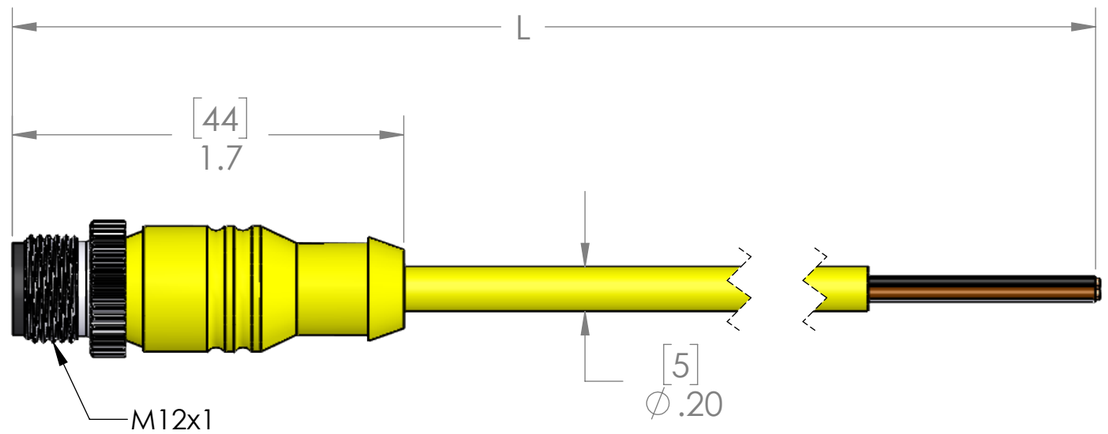

P/N	L	STD?
MDCP-4MP-1M	40" [1m]	YES
MDCP-4MP-2M	79" [2m]	YES
MDCP-4MP-3M	118" [3m]	NO
MDCP-4MP-4M	157" [4m]	YES
MDCP-4MP-5M	197" [5m]	YES
MDCP-4MP-6M	236" [6m]	NO
MDCP-4MP-8M	315" [8m]	NO
MDCP-4MP-10M	393" [10m]	YES
MDCP-4MP-15M	591" [15m]	NO
MDCP-4MP-20M	787" [20m]	NO
MDCP-4MP-30M	1181" [30m]	NO
MDCP-4MP-50M	1968" [50m]	NO

PARTS LISTED AS NOT BEING STANDARD
MAY HAVE MINIMUM ORDER QUANTITIES

MATERIALS	
BODY:	YELLOW PUR
CONTACTS:	GOLD PLATED COPPER ALLOY
CABLE:	
STYLE:	AWM
AWG:	22 AWG
JACKET:	YELLOW PUR
VOLTAGE:	600V
SHIELD:	NO
COUPLING:	NICKEL PLATED BRASS
INSERT:	POLYAMIDE
O-RING:	
APPROVALS	
US:	UL LISTED
CANADA:	C-UL LISTED
ROHS:	YES
CE & UKCA:	YES
RATINGS	
PROTECTION CLASS:	IEC IP69

PROPRIETARY AND CONFIDENTIAL
THE INFORMATION CONTAINED IN THIS DRAWING IS THE SOLE PROPERTY OF MENCOM CORPORATION. ANY REPRODUCTION IN PART OR AS A WHOLE WITHOUT THE WRITTEN PERMISSION OF MENCOM CORPORATION IS PROHIBITED.

VOLTS	300V
AMPS	4A
TEMP:	80°C

UNLESS OTHERWISE SPECIFIED:
DIMENSIONS ARE IN INCHES AND [MM]

MATERIAL

FINISH

DO NOT SCALE DRAWING

DRAWN BY	ADM
DRAWN DATE	06/16/2023
CHECKED BY	JJH
CHECK DATE	06/19/2023

COMMENTS:

MENCOM CORPORATION

TITLE:

SIZE	DWG. NO.	REV
B	MDCP-4MP-ZZ	B
SCALE: 3:2	WEIGHT:	SHEET 1 OF 1