WIRING		
MALE		FEMALE
PIN #		PIN #
1	-------	1
2	-------	2
3	-------	3
4	-------	4
5	-------	5
6	-------	6
7	-------	7
8	-------	8

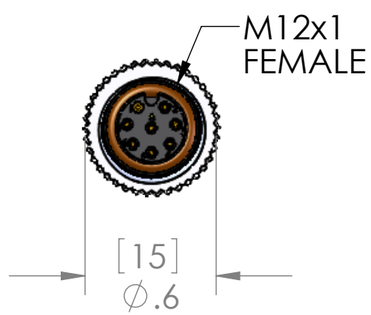

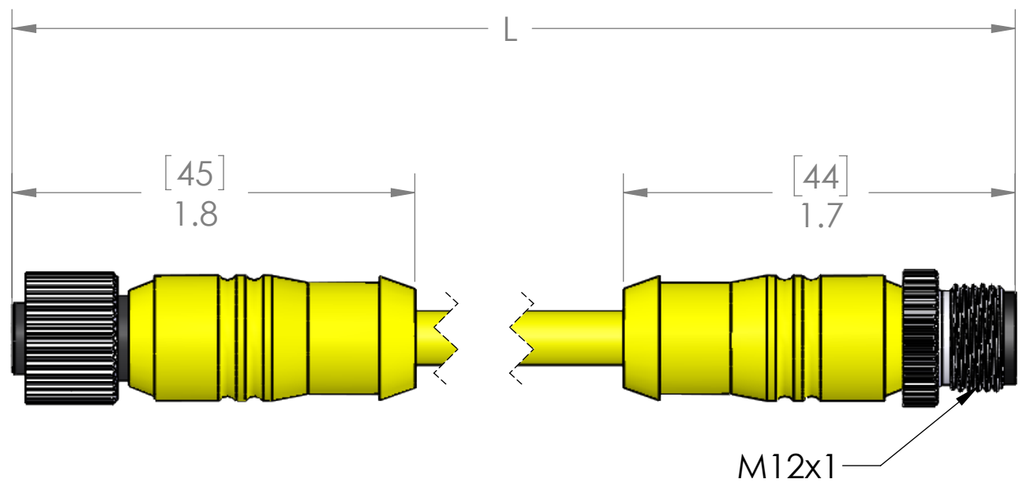

P/N	L	STD?
MDCP-8MFP-1M	40" [1M]	YES
MDCP-8MFP-2M	79" [2M]	YES
MDCP-8MFP-3M	118" [3M]	NO
MDCP-8MFP-4M	157" [4M]	YES
MDCP-8MFP-5M	197"[5M]	YES
MDCP-8MFP-6M	236" [6M]	NO
MDCP-8MFP-8M	315" [8M]	NO
MDCP-8MFP-10M	393" [10M]	YES
MDCP-8MFP-15M	590" [15M]	NO
MDCP-8MFP-20M	786" [20M]	NO
MDCP-8MFP-30M	1179" [30M]	NO
MDCP-8MFP-50M	1969" [50M]	NO

PARTS LISTED AS NOT BEING STANDARD
MAY HAVE MINIMUM ORDER QUANTITIES

MATERIALS	
BODY:	YELLOW PUR
CONTACTS:	GOLD PLATED COPPER ALLOY
CABLE:	
STYLE:	AWM
AWG:	24/8
JACKET:	YELLOW PUR
VOLTAGE:	300V
SHIELD:	MYLAR W/DRAIN
COUPLING:	NICKEL PLATED BRASS
INSERT:	POLYAMIDE
O-RING:	FPM
APPROVALS	
US:	UL LISTED
CANADA:	C-UL LISTED
ROHS:	YES
CE & UKCA:	YES
RATINGS	
PROTECTION CLASS:	IEC IP69

PROPRIETARY AND CONFIDENTIAL
THE INFORMATION CONTAINED IN THIS DRAWING IS THE SOLE PROPERTY OF MENCOM CORPORATION. ANY REPRODUCTION IN PART OR AS A WHOLE WITHOUT THE WRITTEN PERMISSION OF MENCOM CORPORATION IS PROHIBITED.

VOLTS	60V
AMPS	2A
TEMP:	80°C

UNLESS OTHERWISE SPECIFIED:
DIMENSIONS ARE IN INCHES AND [MM]

MATERIAL

FINISH

DO NOT SCALE DRAWING

DRAWN BY	ADM
DRAWN DATE	06/26/2023
CHECKED BY	JJH
CHECK DATE	06/28/2023

COMMENTS:

MENCOM CORPORATION

TITLE:

SIZE B | DWG. NO. MDCP-8MFP-ZZ | REV B

SCALE: 1.5:1 | WEIGHT: | SHEET 1 OF 1