PIN #	COLOR
1	BROWN
2	WHITE
3	BLUE
4	BLACK
5	GREEN/YELLOW

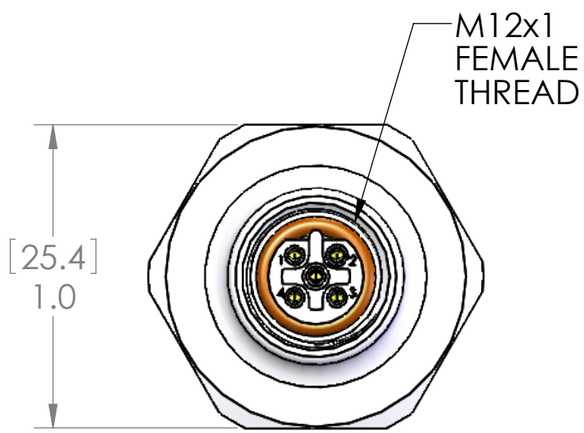

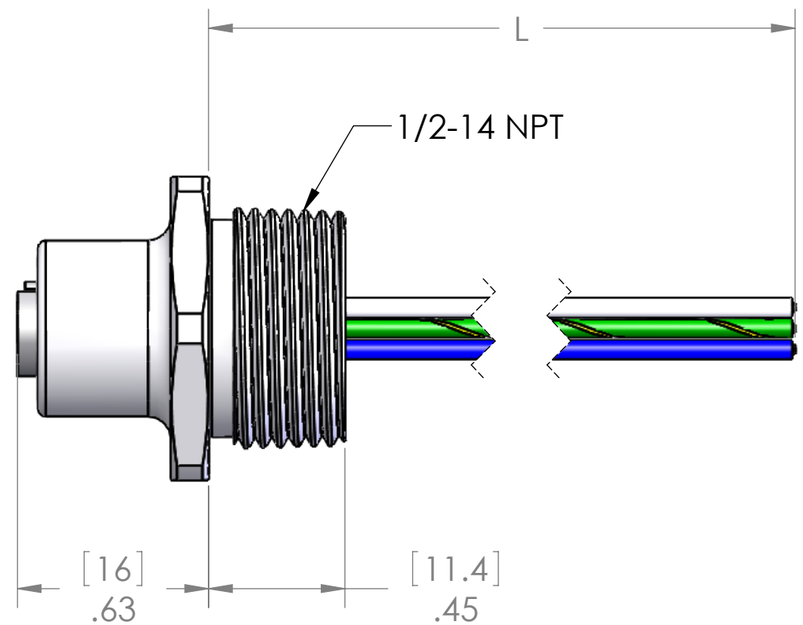

TABLE A	
P/N	L
MEC-5FR-2	12" [0.3M]
MEC-5FR-2-0.5M	20" [0.5M]
MEC-5FR-2-0.6M	24" [0.6M]
MEC-5FR-2-1M	40" [1M]
MEC-5FR-2-2M	79" [2M]
MEC-5FR-2-3M	118" [3M]
MEC-5FR-2-5M	197" [5M]
MEC-5FR-2-10M	393" [10M]

OTHER LENGTHS AVAILABLE
PLEASE CONSULT FACTORY

O-RING AND LOCKNUT ARE INCLUDED ON LENGTHS OF 20" [5M] AND LONGER.

MATERIALS	
SHELL:	NICKEL PLATED BRASS
CONTACTS:	GOLD PLATED COPPER ALLOY
WIRES:	
STYLE:	UL 1007/1569
AWG:	22 AWG
JACKET:	PVC
VOLTAGE:	300V
INSERT:	POLYAMIDE
O-RING:	NBR & FPM
NUT:	ZINC PLATED STEEL
APPROVALS	
US:	UL LISTED
CANADA:	C-UL LISTED
ROHS:	YES
CE & UKCA:	YES
RATINGS	
PROTECTION CLASS:	UL TYPE 4 & 12, IEC IP69

PROPRIETARY AND CONFIDENTIAL

THE INFORMATION CONTAINED IN THIS DRAWING IS THE SOLE PROPERTY OF MENCOM CORPORATION. ANY REPRODUCTION IN PART OR AS A WHOLE WITHOUT THE WRITTEN PERMISSION OF MENCOM CORPORATION IS PROHIBITED.

VOLTS	300V
AMPS	4A
TEMP:	105°C

UNLESS OTHERWISE SPECIFIED:
DIMENSIONS ARE IN INCHES AND [MM]

MATERIAL

FINISH

DO NOT SCALE DRAWING

DRAWN BY	ADM
DRAWN DATE	08/09/2023
CHECKED BY	JJH
CHECK DATE	08/10/2023

COMMENTS:

MENCOM CORPORATION

TITLE:

SIZE	DWG. NO.	REV
B	MEC-5FR-2-ZZ	B

SCALE: 2:1 WEIGHT: SHEET 1 OF 1