PIN #	COLOR
1	BROWN
2	WHITE
3	BLUE
4	BLACK
5	GREEN/YELLOW

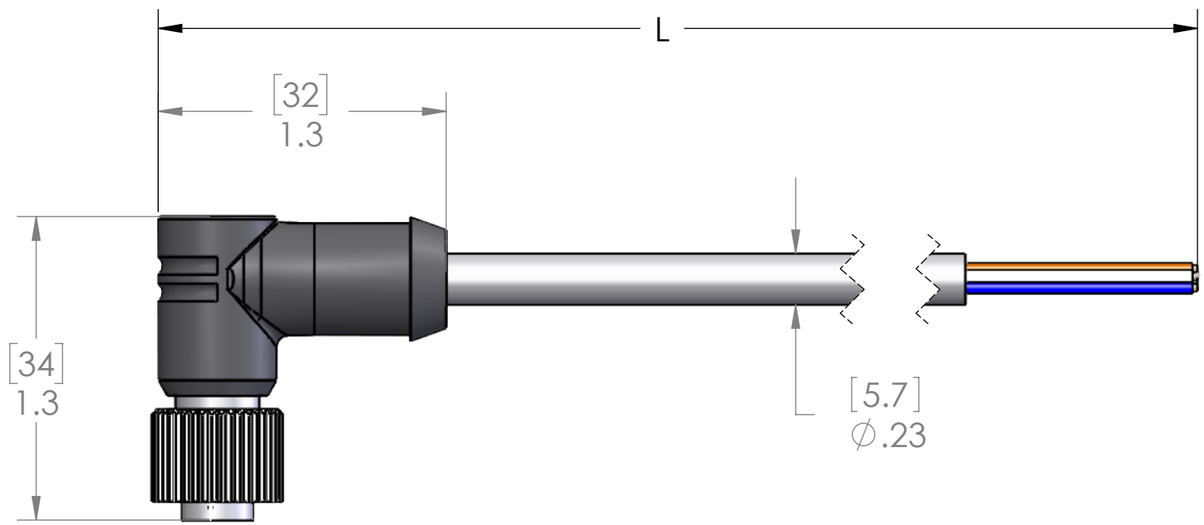

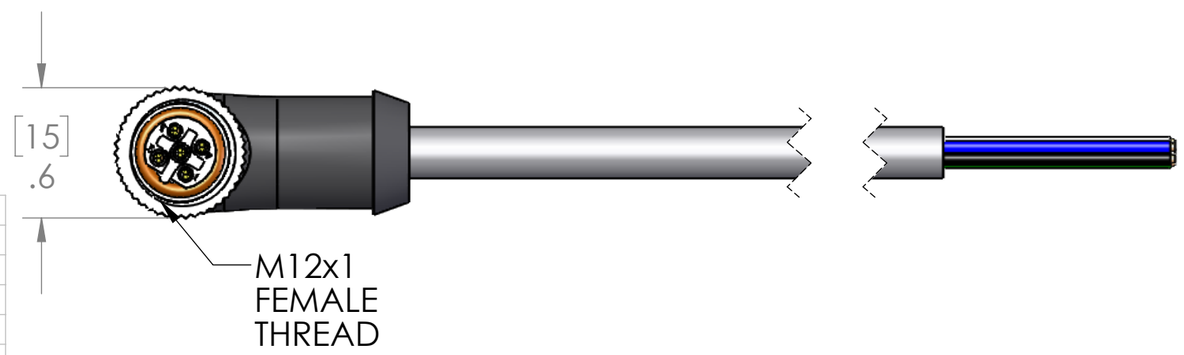

TABLE A		
P/N	L	STD?
MEC-5FP-1M-R	40" [1m]	YES
MEC-5FP-2M-R	79" [2m]	YES
MEC-5FP-3M-R	118" [3m]	NO
MEC-5FP-4M-R	157" [4m]	NO
MEC-5FP-5M-R	197" [5m]	YES
MEC-5FP-8M-R	315" [8m]	NO
MEC-5FP-10M-R	393" [10m]	YES
MEC-5FP-15M-R	590" [15m]	YES
MEC-5FP-20M-R	786" [20m]	NO
MEC-5FP-25M-R	983" [25m]	NO
MEC-5FP-30M-R	1179" [30m]	NO

PARTS LISTED AS NOT BEING STANDARD
MAY HAVE MINIMUM ORDER QUANTITIES

MATERIALS	
BODY:	BLACK PVC
CONTACTS:	GOLD PLATED COPPER ALLOY
CABLE:	
STYLE:	AWM
AWG:	22 AWG
JACKET:	BLACK PVC
VOLTAGE:	600V
SHIELD:	NO
COUPLING:	NICKEL PLATED BRASS
INSERT:	POLYAMIDE
O-RING:	FPM
APPROVALS	
US:	UL LISTED
CANADA:	C-UL LISTED
ROHS:	YES
CE & UKCA:	YES
RATINGS	
PROTECTION CLASS:	UL TYPE 4 & 12, IEC IP69

PROPRIETARY AND CONFIDENTIAL

THE INFORMATION CONTAINED IN THIS DRAWING IS THE SOLE PROPERTY OF MENCOM CORPORATION. ANY REPRODUCTION IN PART OR AS A WHOLE WITHOUT THE WRITTEN PERMISSION OF MENCOM CORPORATION IS PROHIBITED.

VOLTS	300V
AMPS	4A
TEMP:	105°C

UNLESS OTHERWISE SPECIFIED:

DIMENSIONS ARE IN INCHES AND [MM]

MATERIAL

FINISH

DO NOT SCALE DRAWING

DRAWN BY	ADM
DRAWN DATE	08/10/2023
CHECKED BY	JJH
CHECK DATE	08/10/2023

COMMENTS:

MENCOM CORPORATION

TITLE:

5 POLE FEM PLUG

SIZE	DWG. NO.	REV
B	MEC-5FP-ZZ-R	C

SCALE: 3:2 WEIGHT: SHEET 1 OF 1