PIN #	COLOR
1	ORANGE
2	BLUE
3	WHITE w/BLACK
4	RED w/BLACK
5	GREEN w/BLACK
6	ORANGE w/BLACK
7	RED
8	GREEN / YELLOW
9	BLACK
10	WHITE

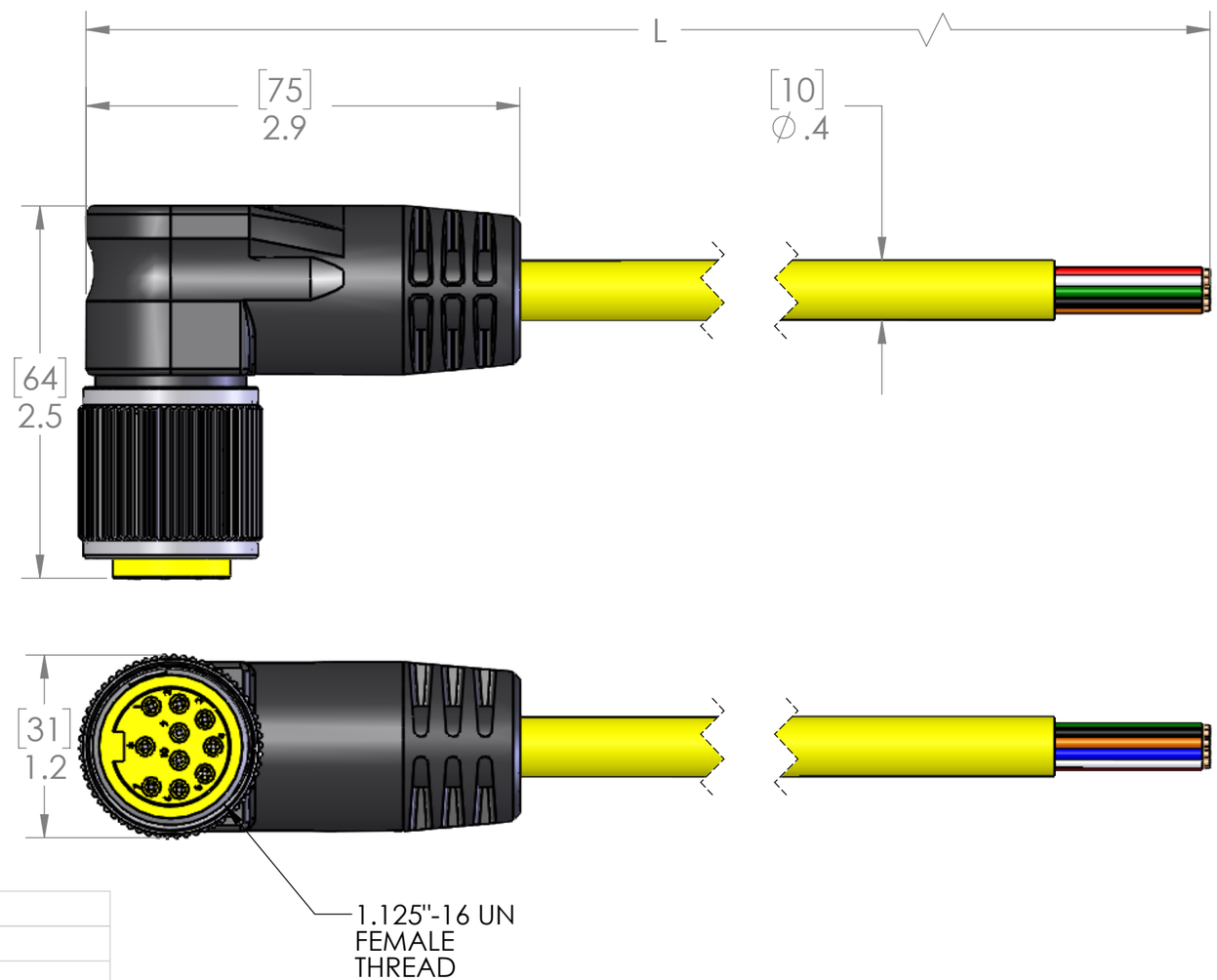

P/N	L	STD?
MIN-10FPX-3-R	36"	YES
MIN-10FPX-6-R	72"	YES
MIN-10FPX-12-R	144"	YES
MIN-10FPX-15-R	180"	NO
MIN-10FPX-20-R	240"	YES
MIN-10FPX-30-R	360"	YES
MIN-10FPX-40-R	480"	NO
MIN-10FPX-50-R	600"	NO
MIN-10FPX-60-R	720"	NO
MIN-10FPX-100-R	1200"	NO

PARTS LISTED AS NOT BEING STANDARD MAY HAVE MINIMUM ORDER QUANTITIES

MATERIALS	
BODY:	BLACK PVC
CONTACTS:	GOLD PLATED COPPER ALLOY
CABLE:	18/10 YELLOW PVC JACKET
COUPLING:	NICKEL PLATED BRASS
APPROVALS:	
US:	UL LISTED
CANADA:	C-UL LISTED
RoHS:	YES
CE:	YES

PROPRIETARY AND CONFIDENTIAL

THE INFORMATION CONTAINED IN THIS DRAWING IS THE SOLE PROPERTY OF MENCOM CORPORATION. ANY REPRODUCTION IN PART OR AS A WHOLE WITHOUT THE WRITTEN PERMISSION OF MENCOM CORPORATION IS PROHIBITED.

VOLTS	300V
AMPS	4A
TEMP:	105°C

UNLESS OTHERWISE SPECIFIED:

DIMENSIONS ARE IN INCHES AND [MM]

MATERIAL

FINISH

DO NOT SCALE DRAWING

DRAWN BY	ADM
DRAWN DATE	02/09/2021
CHECKED BY	JJH
CHECK DATE	02/09/2021

COMMENTS:

MENCOM CORPORATION

TITLE:

SIZE	DWG. NO.	REV
B	MIN-10FPX-ZZ-R	B

SCALE: 1:2 WEIGHT: SHEET 1 OF 1