PIN #	COLOR
1	ORANGE
2	BLUE
3	WHITE w/BLACK
4	RED w/BLACK
5	GREEN w/BLACK
6	ORANGE w/BLACK
7	RED
8	GREEN / YELLOW
9	BLACK
10	WHITE

REVISIONS			
REV.	DESCRIPTION	DATE	APPROVED
A	REDRAWN IN SW	8/1/2005	

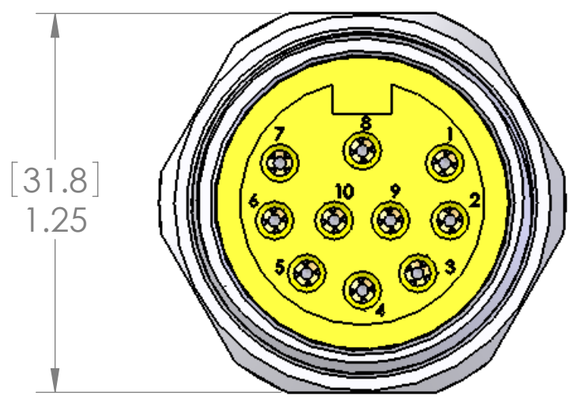

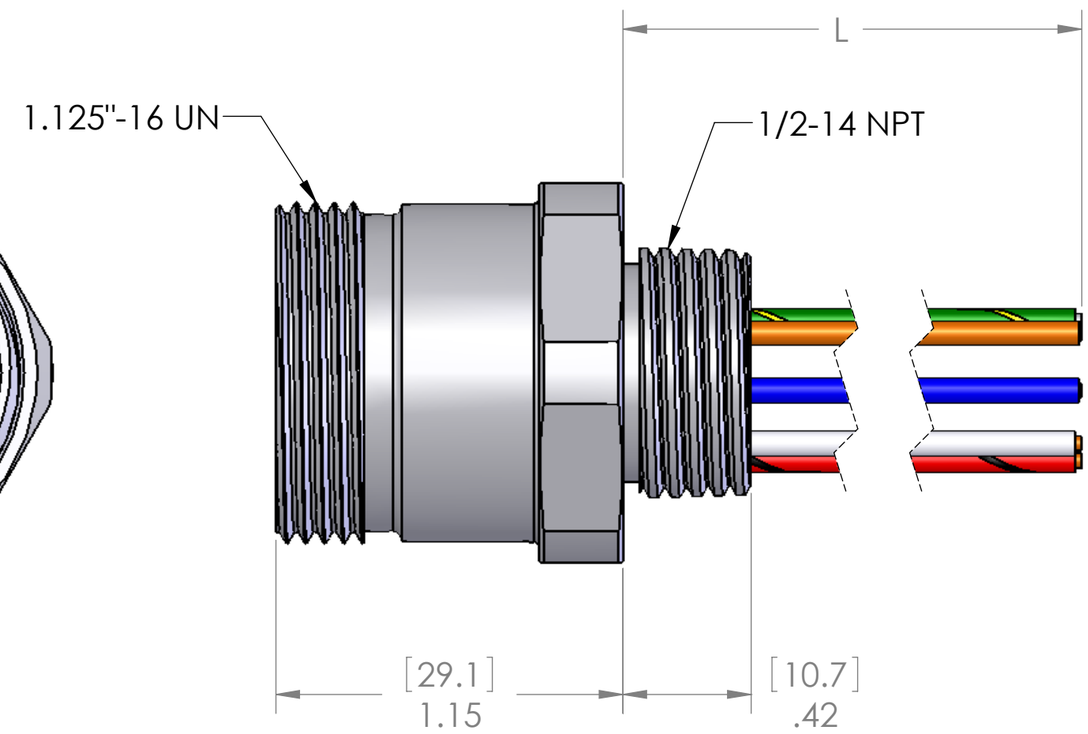

P/N	L
MIN-10FR-1-18	12" [305]
MIN-10FR-2-18	24" [610]
MIN-10FR-3-18	36" [914]
MIN-10FR-4-18	48" [1219]
MIN-10FR-5-18	60" [1524]
MIN-10FR-6-18	72" [1829]
MIN-10FR-10-18	120" [3048]
MIN-10FR-15-18	180" [4572]
MIN-10FR-20-18	240" [6096]

O-RING AND LOCKNUT ARE INCLUDED ON LENGTHS OF 24" AND LONGER.

MATERIALS:	
BODY:	CLEAR ANODIZED ALUMINUM
INSERT:	YELLOW PVC
CONTACTS:	GOLD PLATED COPPER ALLOY
WIRE:	18AWG UL1007

APPROVALS:	
US	UL LISTED
CANADA	C-UL LISTED

PROPRIETARY AND CONFIDENTIAL

THE INFORMATION CONTAINED IN THIS DRAWING IS THE SOLE PROPERTY OF MENCOM CORPORATION. ANY REPRODUCTION IN PART OR AS A WHOLE WITHOUT THE WRITTEN PERMISSION OF MENCOM CORPORATION IS PROHIBITED.

VOLTS	300V
AMPS	4A
TEMP	105°C

SPECIFICATIONS

UNLESS OTHERWISE SPECIFIED:

DIMENSIONS ARE IN INCHES AND [MM]

MATERIAL

FINISH

DO NOT SCALE DRAWING

	NAME
DRAWN	DWM
CHECKED	
ENG APPR.	
MFG APPR.	
Q.A.	

COMMENTS:

MENCOM CORPORATION

TITLE:

10 POL MIN FEM RECEPTACLE

SIZE	DWG. NO.	REV
B	MIN-10FR-ZZ-18	A

SCALE: 2:1 | WEIGHT: | SHEET 1 OF 1