PIN #	COLOR
1	ORANGE
2	BLUE
3	WHITE w/BLACK
4	RED w/BLACK
5	GREEN w/BLACK
6	ORANGE w/BLACK
7	RED
8	GREEN / YELLOW
9	BLACK
10	WHITE

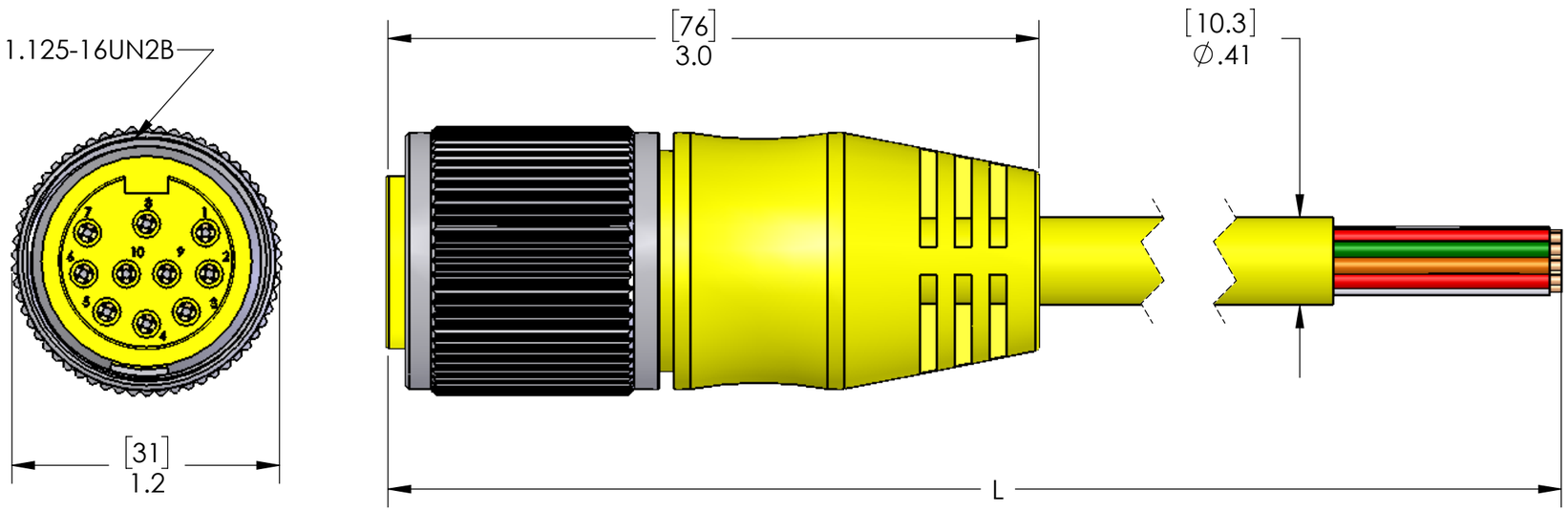

TABLE A		
P/N	L	STD?
MIN-10FPX-3	36"	YES
MIN-10FPX-6	72"	YES
MIN-10FPX-12	144"	YES
MIN-10FPX-15	180"	NO
MIN-10FPX-20	240"	YES
MIN-10FPX-30	360"	YES
MIN-10FPX-40	480"	NO
MIN-10FPX-50	600"	YES
MIN-10FPX-60	720"	NO
MIN-10FPX-80	960"	NO
MIN-10FPX-100	1200"	NO
MIN-10FPX-150	1800"	NO

PARTS LISTED AS NOT BEING STANDARD
MAY HAVE MINIMUM ORDER QUANTITIES

MATERIALS	
BODY:	YELLOW PVC
CONTACTS:	GOLD PLATED COPPER ALLOY
CABLE:	18/10 AWM YELLOW PVC JACKET
COUPLING:	NICKEL PLATED BRASS

APPROVALS:	
US	UL LISTED
CANADA	C-UL LISTED

PROPRIETARY AND CONFIDENTIAL

THE INFORMATION CONTAINED IN THIS DRAWING IS THE SOLE PROPERTY OF MENCOM CORPORATION. ANY REPRODUCTION IN PART OR AS A WHOLE WITHOUT THE WRITTEN PERMISSION OF MENCOM CORPORATION IS PROHIBITED.

VOLTS	300V
AMPS	4A
TEMP:	105°C

UNLESS OTHERWISE SPECIFIED:

DIMENSIONS ARE IN INCHES AND [MM]

MATERIAL

FINISH

DO NOT SCALE DRAWING

DRAWN BY	ADM
DRAWN DATE	07/05/2018
CHECKED BY	ADM
CHECK DATE	07/05/2018

COMMENTS:

MENCOM CORPORATION

TITLE:

SIZE	DWG. NO.	REV
B	MIN-10FPX-ZZ	B
SCALE: 3:2	WEIGHT:	SHEET 1 OF 1