PIN #	COLOR
1	ORANGE
2	BLUE
3	WHITE w/BLACK
4	RED w/BLACK
5	GREEN w/BLACK
6	ORANGE w/BLACK
7	RED
8	GREEN / YELLOW
9	BLACK
10	WHITE

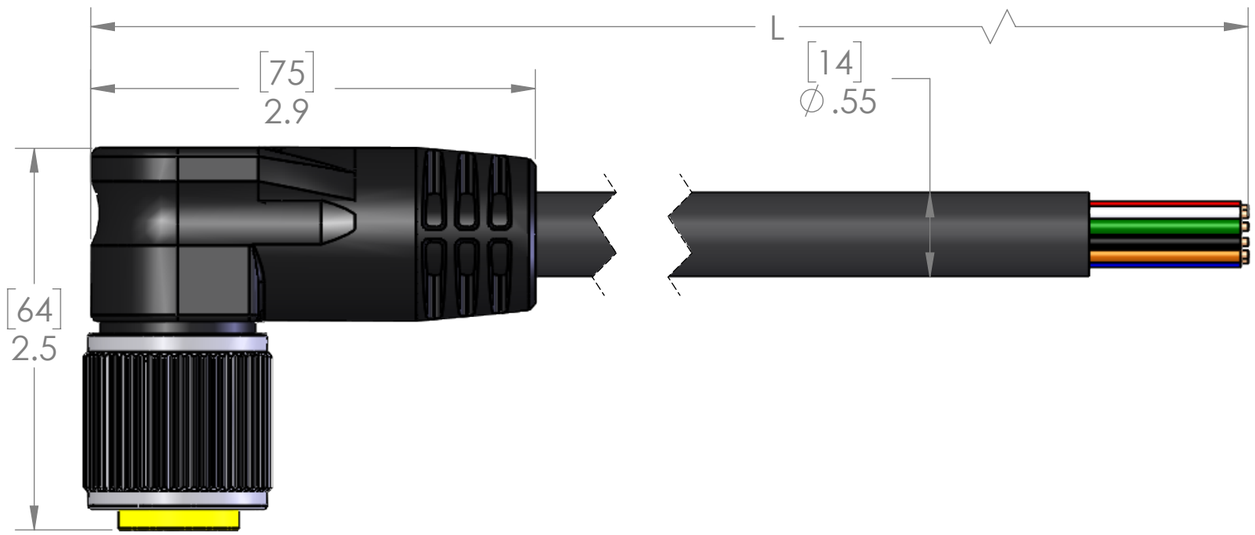

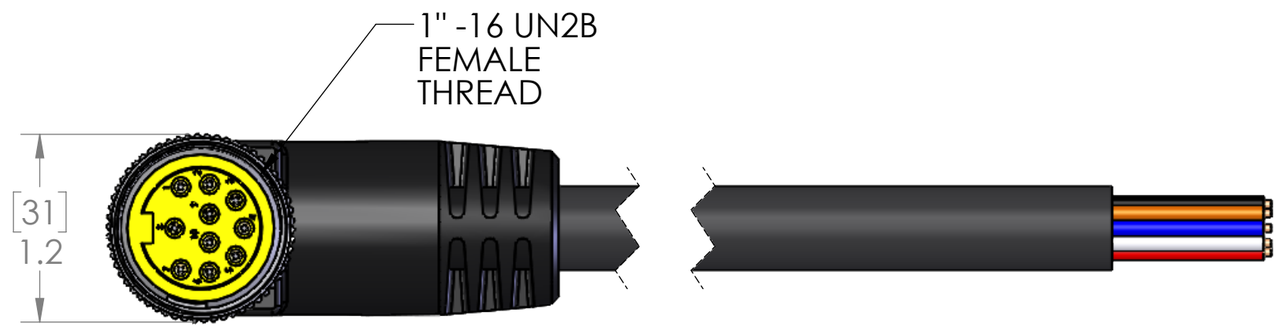

TABLE A		
P/N	L	STD?
MIN-10FP-3-R-C011	36" [0.9m]	YES
MIN-10FP-6-R-C011	72" [1.8m]	YES
MIN-10FP-12-R-C011	144" [3.6m]	YES
MIN-10FP-20-R-C011	240" [6.1m]	YES
MIN-10FP-30-R-C011	360" [9.1m]	YES
MIN-10FP-40-R-C011	480" [12.2m]	NO
MIN-10FP-50-R-C011	600" [15.2m]	YES
MIN-10FP-60-R-C011	720" [18.3m]	NO
MIN-10FP-100-R-C011	1200" [30.5m]	NO

PARTS LISTED AS NOT BEING STANDARD
MAY HAVE MINIMUM ORDER QUANTITIES

MATERIALS	
BODY:	BLACK PVC
INSERT:	YELLOW PVC
CONTACTS:	GOLD PLATED COPPER ALLOY
CABLE:	16/10 TC-ER BLACK PVC
COUPLING:	NICKEL PLATED BRASS
APPROVALS:	
US:	UL LISTED
CANADA:	C-UL LISTED
RoHS:	YES
CE:	YES

PROPRIETARY AND CONFIDENTIAL

THE INFORMATION CONTAINED IN THIS DRAWING IS THE SOLE PROPERTY OF MENCOM CORPORATION. ANY REPRODUCTION IN PART OR AS A WHOLE WITHOUT THE WRITTEN PERMISSION OF MENCOM CORPORATION IS PROHIBITED.

VOLTS	600V
AMPS	7A
TEMP:	105°

UNLESS OTHERWISE SPECIFIED:

DIMENSIONS ARE IN INCHES AND [MM]

MATERIAL

FINISH

DO NOT SCALE DRAWING

DRAWN BY	GO
DRAWN DATE	02/05/2021
CHECKED BY	JJH
CHECK DATE	02/05/2021

COMMENTS:

MENCOM CORPORATION

TITLE:

SIZE	DWG. NO.	REV
B	MIN-10FP-ZZ-R-C011	B

SCALE: 1:1 WEIGHT: SHEET 1 OF 1