PIN #	COLOR
1	ORANGE
2	BLUE
3	WHITE w/BLK
4	RED w/BLK
5	GREEN w/BLK
6	ORANGE w/BLK
7	BLUE w/BLK
8	BLACK w/WHT
9	GREEN/YELLOW
10	RED
11	WHITE
12	BLACK

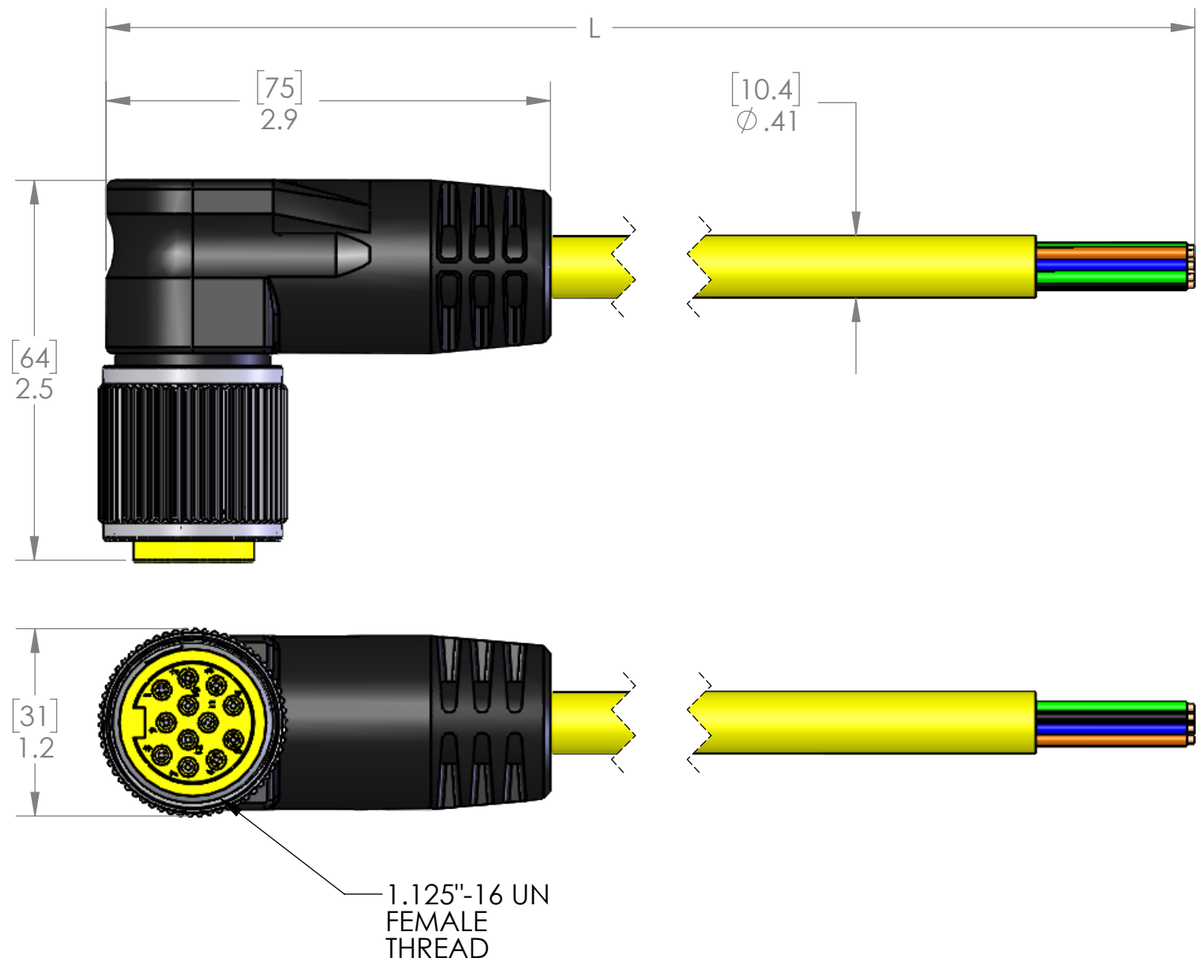

P/N	L	STD?
MIN-12FPX-3-R	36" [0.9M]	YES
MIN-12FPX-6-R	72" [1.8M]	YES
MIN-12FPX-12-R	144" [3.6M]	YES
MIN-12FPX-15-R	180" [4.6M]	NO
MIN-12FPX-20-R	240" [6.1M]	YES
MIN-12FPX-30-R	360" [9.1M]	YES
MIN-12FPX-40-R	480" [12.2M]	NO
MIN-12FPX-50-R	600" [15.2M]	NO
MIN-12FPX-60-R	720" [18.3M]	NO
MIN-12FPX-100-R	1200" [30.5M]	NO

PARTS LISTED AS NOT BEING STANDARD
MAY HAVE MINIMUM ORDER QUANTITIES

MATERIALS	
BODY:	BLACK PVC
CONTACTS:	GOLD PLATED COPPER ALLOY
CABLE:	18/12 YELLOW PVC JACKET
COUPLING:	NICKEL PLATED BRASS

APPROVALS:	
US:	UL LISTED
CANADA:	C-UL LISTED
RoHS:	YES
CE:	YES

PROPRIETARY AND CONFIDENTIAL

THE INFORMATION CONTAINED IN THIS DRAWING IS THE SOLE PROPERTY OF MENCOM CORPORATION. ANY REPRODUCTION IN PART OR AS A WHOLE WITHOUT THE WRITTEN PERMISSION OF MENCOM CORPORATION IS PROHIBITED.

VOLTS	300V
AMPS	4A
TEMP:	105°C

UNLESS OTHERWISE SPECIFIED:

DIMENSIONS ARE IN INCHES AND [MM]

MATERIAL

FINISH

DO NOT SCALE DRAWING

DRAWN BY	ADM
DRAWN DATE	02/09/2021
CHECKED BY	JJH
CHECK DATE	02/09/2021

COMMENTS:

MENCOM CORPORATION

TITLE:

12 POLE FEMALE PLUG

SIZE	DWG. NO.	REV
B	MIN-12FPX-ZZ-R	B

SCALE: 1:1 WEIGHT: SHEET 1 OF 1