PIN #	COLOR
1	ORANGE
2	BLUE
3	WHITE w/BLACK
4	RED w/BLACK
5	GREEN w/BLACK
6	ORANGE w/BLACK
7	RED
8	GREEN / YELLOW
9	BLACK
10	WHITE

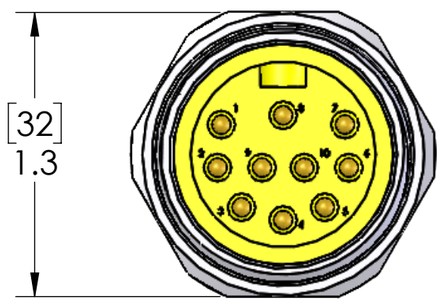

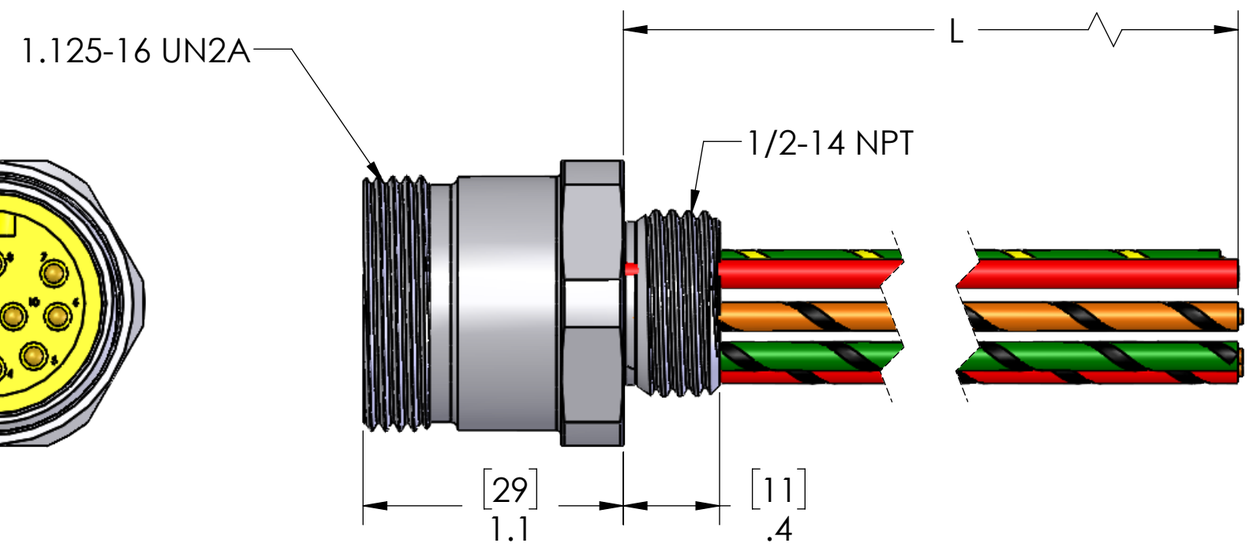

AN O-RING AND LOCKNUT ARE SUPPLIED
ON LENGTHS OF 15" AND LONGER

TABLE A	
P/N	L
MIN-10MR-1	12" [0.3m]
MIN-10MR-2	24" [0.6m]
MIN-10MR-3	36" [0.9m]
MIN-10MR-4	48" [1.2m]
MIN-10MR-5	60" [1.5m]
MIN-10MR-6	72" [1.8m]
MIN-10MR-10	120" [3.1m]
MIN-10MR-15	180" [4.6m]
MIN-10MR-20	240" [6.1m]

OTHER LENGTHS AVAILABLE,
PLEASE CONSULT FACTORY

MATERIALS	
BODY:	CLEAR ANODIZED ALUMINUM
CONTACTS:	GOLD PLATED COPPER ALLOY
WIRE:	16AWG UL1015
INSERT:	YELLOW PVC
O-RING:	NBR
NUT:	ZINC PLATED STEEL

CERTIFICATIONS:	
U.S.:	UL LISTED
CANADA:	C-UL LISTED
RoHS:	YES
CE:	YES

PROPRIETARY AND CONFIDENTIAL

THE INFORMATION CONTAINED IN THIS DRAWING IS THE SOLE PROPERTY OF MENCOM CORPORATION. ANY REPRODUCTION IN PART OR AS A WHOLE WITHOUT THE WRITTEN PERMISSION OF MENCOM CORPORATION IS PROHIBITED.

VOLTS	600V
AMPS	7A
TEMP:	105°C

UNLESS OTHERWISE SPECIFIED:

DIMENSIONS ARE IN INCHES AND [MM]

MATERIAL

FINISH

DO NOT SCALE DRAWING

DRAWN BY	JJH
DRAWN DATE	10/09/2019
CHECKED BY	ADM
CHECK DATE	10/09/2019

COMMENTS:

MENCOM CORPORATION

TITLE:

10 PL ML MIN RECP

SIZE	DWG. NO.	REV
B	MIN-10MR-ZZ	A
SCALE: 3:2	WEIGHT:	SHEET 1 OF 1