PIN #	COLOR
1	ORANGE
2	BLUE
3	WHITE w/BLACK
4	RED w/BLACK
5	GREEN w/BLACK
6	ORANGE w/BLACK
7	BLUE w/BLACK
8	BLACK w/WHITE
9	GREEN / YELLOW
10	RED
11	WHITE
12	BLACK

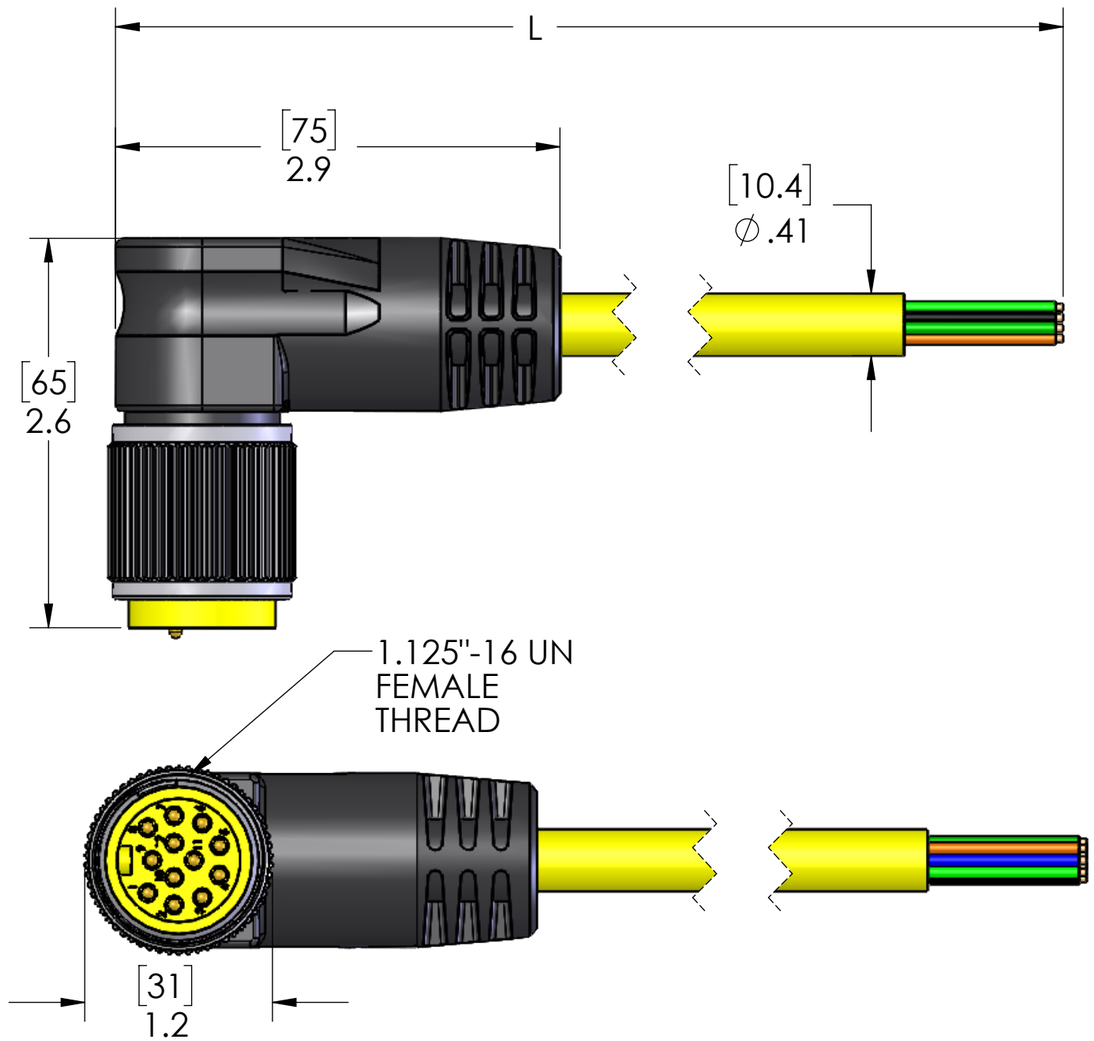

P/N	L	STD?
MIN-12MPX-3-R	36" [0.9M]	YES
MIN-12MPX-6-R	72" [1.8M]	YES
MIN-12MPX-12-R	144" [3.6M]	YES
MIN-12MPX-15-R	180" [4.6M]	NO
MIN-12MPX-20-R	240" [6.1M]	YES
MIN-12MPX-30-R	360" [9.1M]	YES
MIN-12MPX-40-R	480" [12.2M]	NO
MIN-12MPX-50-R	600" [15.2M]	NO
MIN-12MPX-60-R	720" [18.3M]	NO
MIN-12MPX-100-R	1200" [30.5M]	NO

MATERIALS	
BODY:	BLACK PVC
CONTACTS:	GOLD PLATED COPPER ALLOY
CABLE:	
STYLE:	AWM
AWG:	18/12
JACKET:	YELLOW PVC
VOLTAGE:	600V
SHIELD:	NO
COUPLING:	NICKEL PLATED BRASS
INSERT:	YELLOW PVC
O-RING:	N/A
APPROVALS	
US:	UL LISTED
CANADA:	C-UL LISTED
ROHS:	YES
CE:	YES
RATINGS	
PROTECTION CLASS:	UL TYPE 4 & 12, IEC IP69

PROPRIETARY AND CONFIDENTIAL

THE INFORMATION CONTAINED IN THIS DRAWING IS THE SOLE PROPERTY OF MENCOM CORPORATION. ANY REPRODUCTION IN PART OR AS A WHOLE WITHOUT THE WRITTEN PERMISSION OF MENCOM CORPORATION IS PROHIBITED.

VOLTS	300V
AMPS	4A
TEMP:	105°C

UNLESS OTHERWISE SPECIFIED:

DIMENSIONS ARE IN INCHES AND [MM]

MATERIAL

FINISH

DO NOT SCALE DRAWING

DRAWN BY	JJH
DRAWN DATE	01/05/2022
CHECKED BY	ADM
CHECK DATE	01/05/2022

COMMENTS:

MENCOM CORPORATION

TITLE:

12 POLE MALE MIN PLUG

SIZE B | DWG. NO. MIN-12MPX-ZZ-R | REV A

SCALE: 1:1 | WEIGHT: | SHEET 1 OF 1