PIN #	COLOR	PIN #	COLOR
1	GRAY/PINK	8	GREEN
2	WHITE/GREEN	9	PINK
3	WHITE/YELLOW	10	WHITE
4	BROWN	11	RED/BLUE
5	BROWN/YELLOW	12	BROWN/GREEN
6	BLUE	13	GRAY
7	YELLOW	14	RED

REVISIONS			
REV.	DESCRIPTION	DATE	APPROVED
A	Redrawn in SW	6/2/2006	

BROWN AND BLUE ARE 18AWG [1.0 sqmm] WIRES
ALL OTHERS ARE 22AWG [0.34sqmm] WIRES

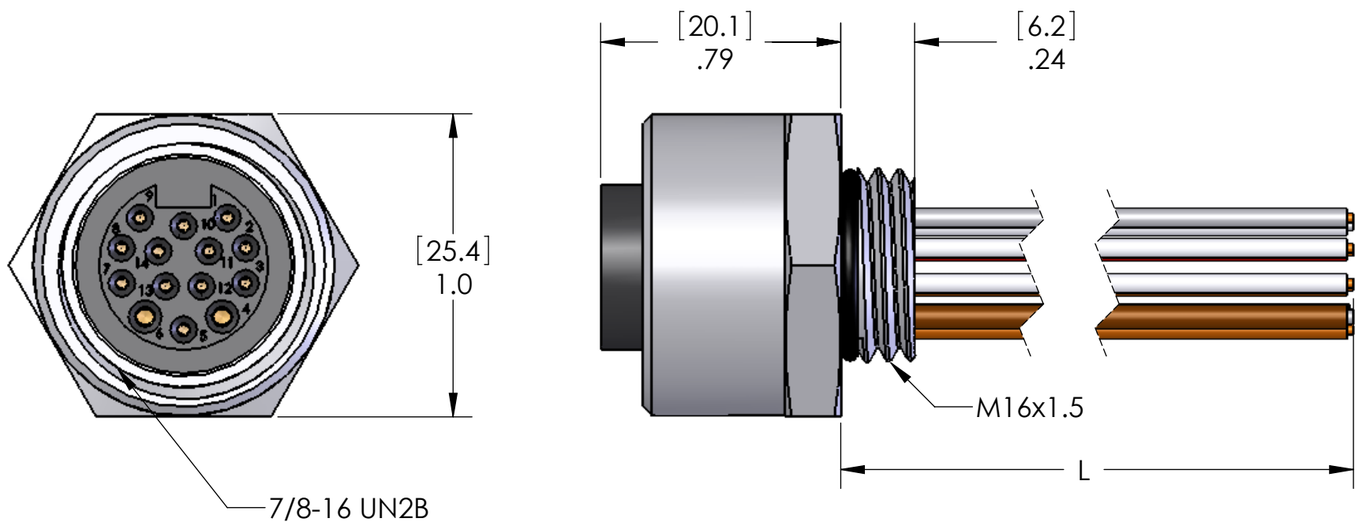

TABLE A	
P/N	L
MIN-14FR-1-M16	12" [305]
MIN-14FR-2-M16	24" [610]
MIN-14FR-3-M16	36" [915]
MIN-14FR-10-M16	120" [3048]
MIN-14FR-15-M16	180" [4572]
MIN-14FR-20-M16	240" [6096]

FOR LENGTHS OF 24" AND LONGER,
AN M16x1.6 JAM NUT IS INCLUDED

MATERIALS	
BODY:	CLEAR ANODIZED ALUMINUM
CONTACTS:	GOLD PLATED COPPER ALLOY
INSERT:	BLACK POLYAMIDE
WIRE:	18AWG & 22AWG UL1007
O-RING:	NBR

PROPRIETARY AND CONFIDENTIAL
THE INFORMATION CONTAINED IN THIS DRAWING IS THE SOLE PROPERTY OF MENCOM CORPORATION. ANY REPRODUCTION IN PART OR AS A WHOLE WITHOUT THE WRITTEN PERMISSION OF MENCOM CORPORATION IS PROHIBITED.

SPECIFICATIONS

UNLESS OTHERWISE SPECIFIED:
DIMENSIONS ARE IN INCHES AND [MM]

MATERIAL

FINISH

DO NOT SCALE DRAWING

	NAME
DRAWN	BEM
CHECKED	
ENG APPR.	
MFG APPR.	
Q.A.	

COMMENTS:

MENCOM CORPORATION

TITLE:

SIZE B | DWG. NO. MIN-14FR-ZZ-M16 | REV A

SCALE: 2:1 | WEIGHT: | SHEET 1 OF 1