PIN #	COLOR
1	WHITE
2	BLACK

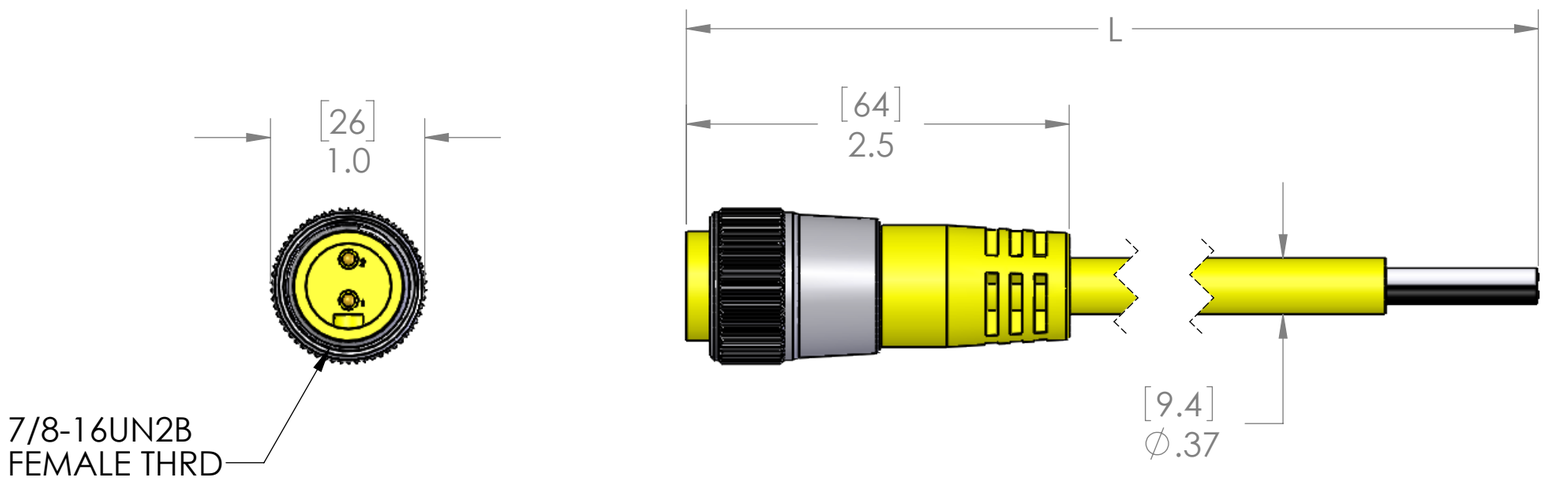

MATERIALS	
BODY:	**YELLOW PVC**
CONTACTS:	**GOLD PLATED COPPER ALLOY**
CABLE:	
STYLE:	**STOOW**
AWG:	**16 AWG**
JACKET:	**YELLOW PVC**
VOLTAGE:	**600V**
SHIELD:	**NO**
COUPLING:	**NICKEL PLATED BRASS**
INSERT:	**YELLOW PVC**
O-RING:	**N/A**
APPROVALS	
US:	**UL LISTED**
CANADA:	**C-UL LISTED**
ROHS:	**YES**
CE & UKCA:	**YES**
RATINGS	
PROTECTION CLASS:	**UL TYPE 4 & 12, IEC IP69**

TABLE A

P/N	L	STD?
MIN-2MP-3	36" [0.9m]	YES
MIN-2MP-6	72" [1.8m]	YES
MIN-2MP-12	144" [3.7m]	YES
MIN-2MP-20	240" [6.1m]	YES
MIN-2MP-30	360" [9.1m]	YES
MIN-2MP-40	480" [12.2m]	NO
MIN-2MP-50	600" [15.2m]	YES

PARTS LISTED AS NOT BEING STANDARD
MAY HAVE MINIMUM ORDER QUANTITIES

PROPRIETARY AND CONFIDENTIAL
THE INFORMATION CONTAINED IN THIS DRAWING IS THE SOLE PROPERTY OF MENCOM CORPORATION. ANY REPRODUCTION IN PART OR AS A WHOLE WITHOUT THE WRITTEN PERMISSION OF MENCOM CORPORATION IS PROHIBITED.

VOLTS	600V
AMPS	13A
TEMP:	105°C

UNLESS OTHERWISE SPECIFIED:
DIMENSIONS ARE IN INCHES AND [MM]

MATERIAL
FINISH
DO NOT SCALE DRAWING

DRAWN BY	ADM
DRAWN DATE	09/05/2023
CHECKED BY	JJH
CHECK DATE	09/06/2023

COMMENTS:

MENCOM CORPORATION

TITLE:

SIZE B | DWG. NO. MIN-2MP-ZZ | REV C

SCALE: 1:1 | WEIGHT: | SHEET 1 OF 1