PIN #	COLOR
1	WHITE
2	BLACK

REVISIONS			
REV.	DESCRIPTION	DATE	APPROVED
A	INITIAL RELEASE	7/29/2005	

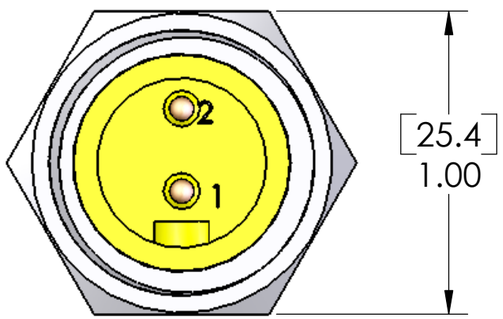

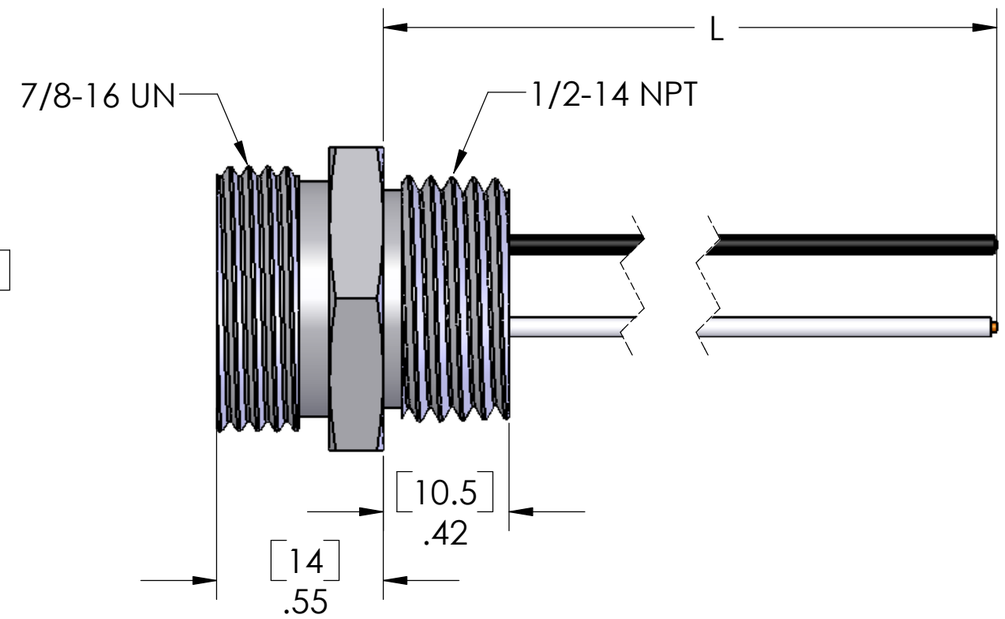

P/N	L	STD?
MIN-2MR-.5-22	6"	YES
MIN-2MR-1-22	12"	NO
MIN-2MR-2-22	24"	NO
MIN-2MR-3-22	36"	NO
MIN-2MR-4-22	48"	NO
MIN-2MR-5-22	60"	NO
MIN-2MR-6-22	72"	NO
MIN-2MR-8-22	96"	NO
MIN-2MR-10-22	120"	NO
MIN-2MR-15-22	180"	NO
MIN-2MR-20-22	240"	NO

PARTS LISTED AS NOT BEING STANDARD
MAY HAVE MINIMUM ORDER QUANTITIES

MATERIALS	
BODY:	CLEAR ANODIZED ALUMINUM
CONTACTS:	GOLD PLATED COPPER ALLOY
INSERT:	YELLOW PVC
WIRE:	22AWG UL1007

APPROVALS	
U.S.	UL RECOGNIZED
CANADA	C-UL RECOGNIZED

PROPRIETARY AND CONFIDENTIAL
THE INFORMATION CONTAINED IN THIS DRAWING IS THE SOLE PROPERTY OF MENCOM CORPORATION. ANY REPRODUCTION IN PART OR AS A WHOLE WITHOUT THE WRITTEN PERMISSION OF MENCOM CORPORATION IS PROHIBITED.

VOLTS	300V
AMPS	4A
TEMP	105°C

SPECIFICATIONS

UNLESS OTHERWISE SPECIFIED:
DIMENSIONS ARE IN INCHES AND [MM]

MATERIAL

FINISH

DO NOT SCALE DRAWING

	NAME
DRAWN	DWM
CHECKED	
ENG APPR.	
MFG APPR.	
Q.A.	

COMMENTS:

MENCOM CORPORATION

TITLE:

SIZE	DWG. NO.	REV
B	MIN-2MR-ZZ-22	A

SCALE: 2:1 | WEIGHT: | SHEET 1 OF 1