PIN #	COLOR
1	WHITE
2	BLACK

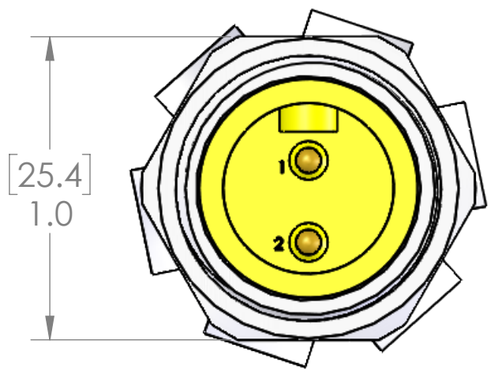

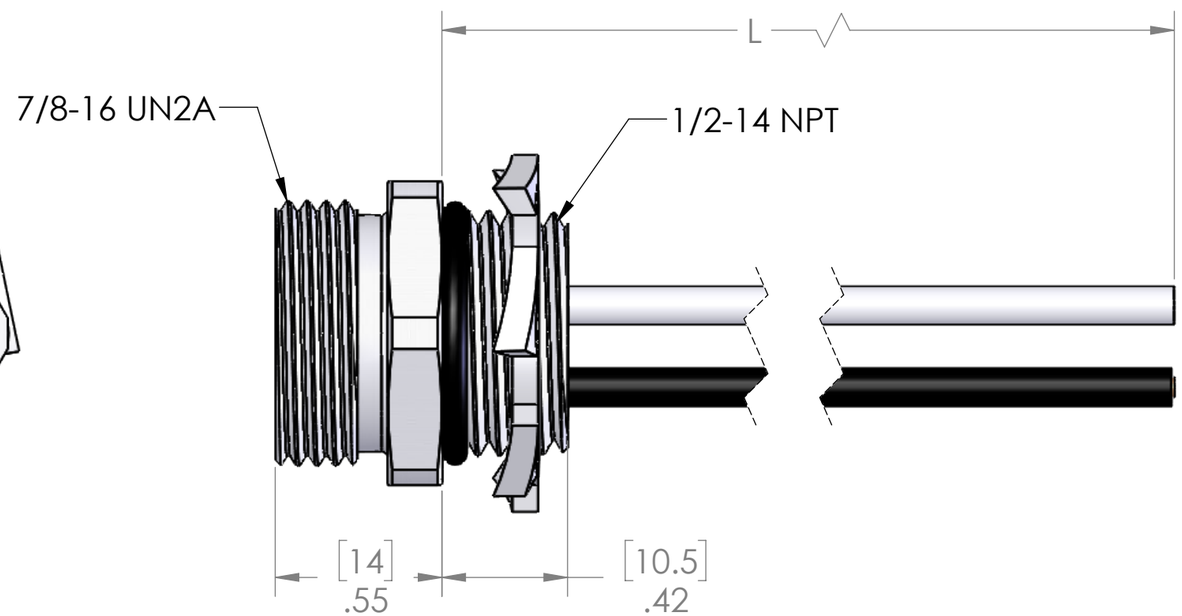

TABLE A	
P/N	L
MIN-2FR-1-SS	12" [0.3m]
MIN-2FR-2-SS	24" [0.6m]
MIN-2FR-3-SS	36" [0.9m]
MIN-2FR-4-SS	48" [1.2m]
MIN-2FR-5-SS	60" [1.5m]
MIN-2FR-6-SS	72" [1.8m]
MIN-2FR-10-SS	120" [3.0m]
MIN-2FR-15-SS	180" [4.6m]
MIN-2FR-20-SS	240" [6.1m]

MATERIALS	
BODY:	STAINLESS STEEL
CONTACTS:	GOLD PLATED COPPER ALLOY
INSERT:	YELLOW PVC
WIRE:	16AWG UL1015
O RING:	NBR
LOCK NUT:	ZINC PLATED STEEL

CERTIFICATIONS:	
US:	UL LISTED
CANADA:	C-UL LISTED
RoHS:	YES
CE:	YES

PROPRIETARY AND CONFIDENTIAL

THE INFORMATION CONTAINED IN THIS DRAWING IS THE SOLE PROPERTY OF MENCOM CORPORATION. ANY REPRODUCTION IN PART OR AS A WHOLE WITHOUT THE WRITTEN PERMISSION OF MENCOM CORPORATION IS PROHIBITED.

VOLTS	600V
AMPS	13A
TEMP:	105°C

UNLESS OTHERWISE SPECIFIED:

DIMENSIONS ARE IN INCHES AND [MM]

MATERIAL

FINISH

DO NOT SCALE DRAWING

DRAWN BY	GO
DRAWN DATE	03/12/2020
CHECKED BY	JJH
CHECK DATE	03/12/2020

COMMENTS:

MENCOM CORPORATION

TITLE:

SIZE	DWG. NO.	REV
B	MIN-2MR-ZZ-SS	A

SCALE: 1:1 WEIGHT: SHEET 1 OF 1