PIN #	COLOR
1	WHITE
2	BLACK

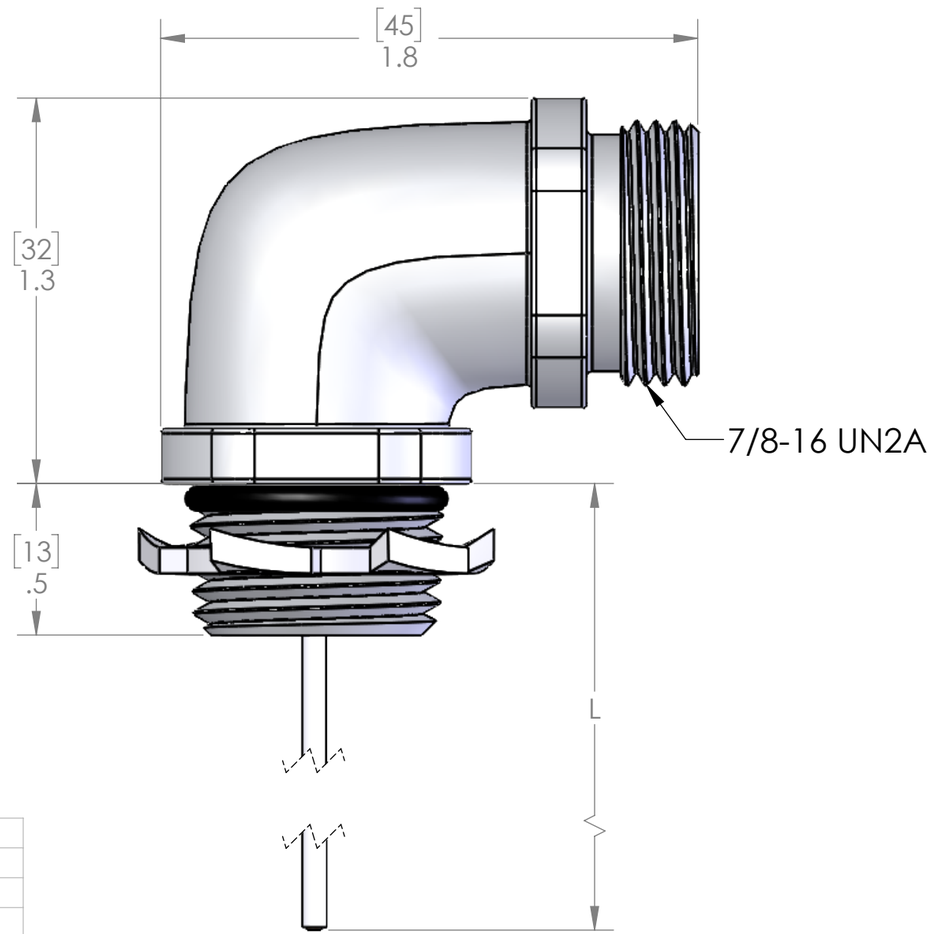

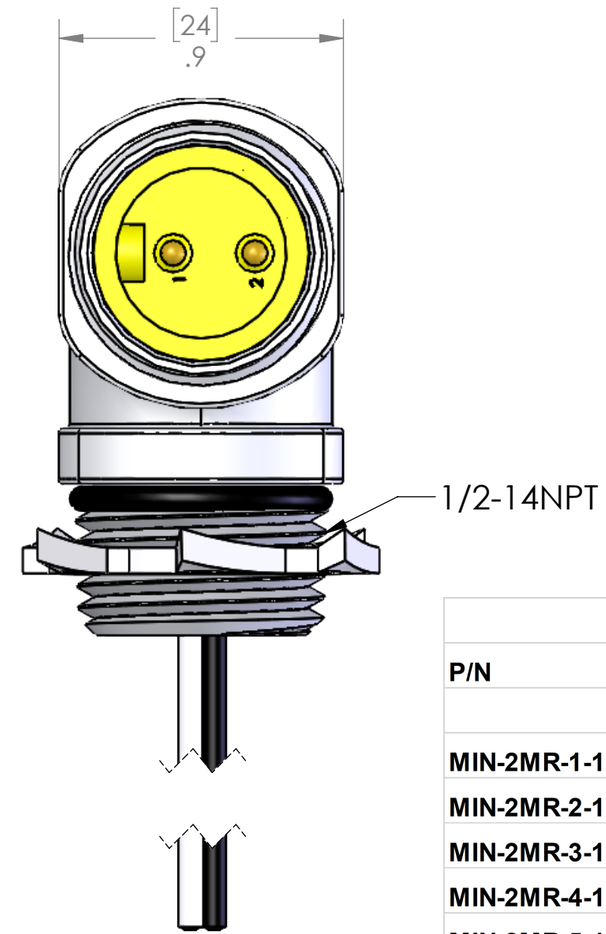

TABLE A	
P/N	L
MIN-2MR-1-18-R	10" [0.3m]
MIN-2MR-2-18-R	22" [0.6m]
MIN-2MR-3-18-R	36" [0.9m]
MIN-2MR-4-18-R	48" [1.2m]
MIN-2MR-5-18-R	60" [1.5m]
MIN-2MR-6-18-R	72" [1.8m]
MIN-2MR-10-18-R	120" [4.7m]

OTHER LENGTHS AVAILABLE,
PLEASE CONSULT FACTORY

MATERIALS	
SHELL:	ZINC DIE CAST
CONTACTS:	GOLD PLATED COPPER ALLOY
WIRES:	
STYLE:	UL 1007/1569
AWG:	18 AWG
JACKET:	PVC
VOLTAGE:	300V
INSERT:	YELLOW PVC
O-RING:	NBR
NUT:	ZINC PLATED STEEL
APPROVALS	
US:	UL LISTED
CANADA:	C-UL LISTED
ROHS:	YES
CE & UKCA:	YES
RATINGS	
PROTECTION CLASS:	UL TYPE 4 & 12, IEC IP69

PROPRIETARY AND CONFIDENTIAL

THE INFORMATION CONTAINED IN THIS DRAWING IS THE SOLE PROPERTY OF MENCOM CORPORATION. ANY REPRODUCTION IN PART OR AS A WHOLE WITHOUT THE WRITTEN PERMISSION OF MENCOM CORPORATION IS PROHIBITED.

VOLTS	300V
AMPS	10A
TEMP:	105°C

UNLESS OTHERWISE SPECIFIED:

DIMENSIONS ARE IN INCHES AND [MM]

MATERIAL

FINISH

DO NOT SCALE DRAWING

DRAWN BY	GO
DRAWN DATE	09/06/2023
CHECKED BY	JJH
CHECK DATE	09/07/2023

COMMENTS:

MENCOM CORPORATION

TITLE:

SIZE B | DWG. NO. MIN-2MR-ZZ-18-R | REV B

SCALE: 1:2 | WEIGHT: | SHEET 1 OF 1