PIN #	COLOR
1	GREEN / YELLOW
2	BLACK
3	WHITE

REVISIONS		
REV.	DESCRIPTION	DATE
A	REDRAWN IN SW	7/21/2005

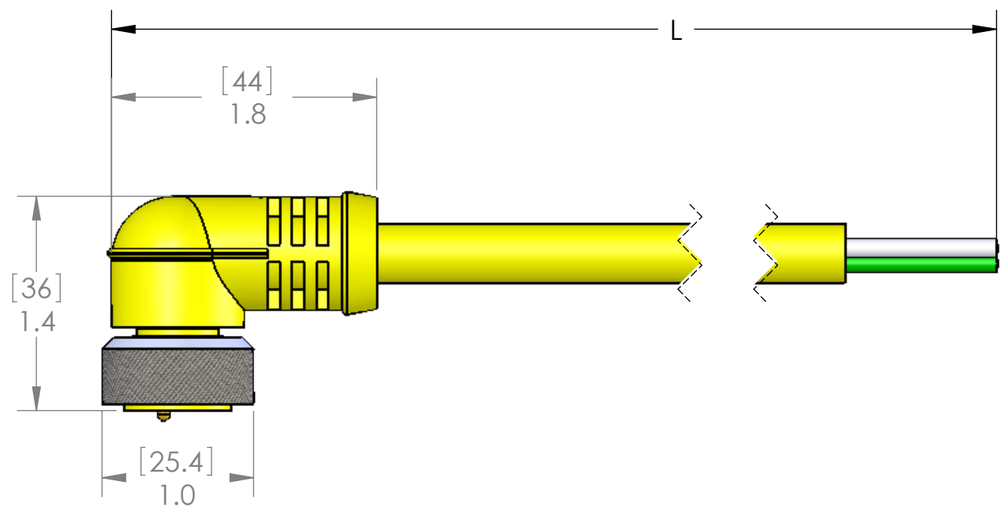

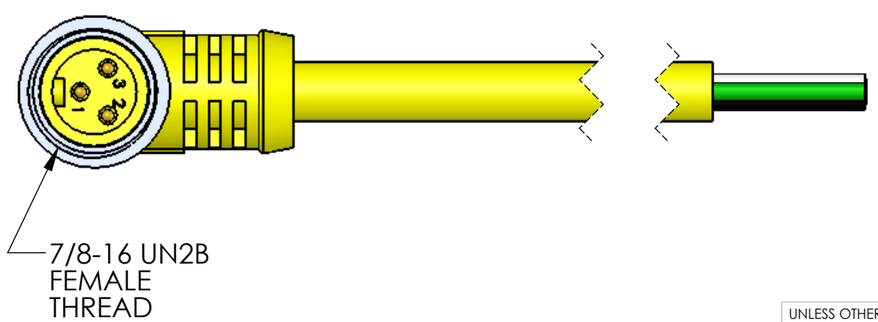

P/N	L	STD?
MIN-3MP-3-R	36" [0.9m]	YES
MIN-3MP-6-R	72" [1.8m]	YES
MIN-3MP-12-R	144" [3.7m]	YES
MIN-3MP-15-R	180" [4.6m]	NO
MIN-3MP-20-R	240" [6.1m]	YES
MIN-3MP-30-R	360" [9.1m]	YES
MIN-3MP-40-R	480" [12.2m]	NO
MIN-3MP-50-R	600" [15.2m]	NO
MIN-3MP-60-R	720" [18.3m]	NO
MIN-3MP-100-R	1200" [30.5m]	NO

PARTS LISTED AS BEING NOT STANDARD
MAY REQUIRE MINIMUM ORDERS

MATERIALS	
BODY:	YELLOW PVC
CONTACTS:	GOLD PLATED COPPER ALLOY
CABLE:	16/3 STOOW YELLOW
COUPLING:	CLEAR ANODIZED ALUMINUM

APPROVALS:	
US	UL LISTED
CANADA	C-UL LISTED

PROPRIETARY AND CONFIDENTIAL
THE INFORMATION CONTAINED IN THIS DRAWING IS THE SOLE PROPERTY OF MENCOM CORPORATION. ANY REPRODUCTION IN PART OR AS A WHOLE WITHOUT THE WRITTEN PERMISSION OF MENCOM CORPORATION IS PROHIBITED.

VOLTS	600V
AMPS	13A
TEMP	105°C

SPECIFICATIONS

UNLESS OTHERWISE SPECIFIED:
DIMENSIONS ARE IN INCHES
AMD [MM[

MATERIAL

FINISH

DO NOT SCALE DRAWING

	NAME	DATE
DRAWN	DWM	
CHECKED		
ENG APPR.		
MFG APPR.		
Q.A.		

COMMENTS:

MENCOM CORPORATION

TITLE:

SIZE	DWG. NO.	REV
B	MIN-3MP-ZZ-R	A

SCALE: 1:1 | WEIGHT: | SHEET 1 OF 1