PIN #	COLOR
1	BLACK
2	WHITE
3	RED
4	GREEN / YELLOW

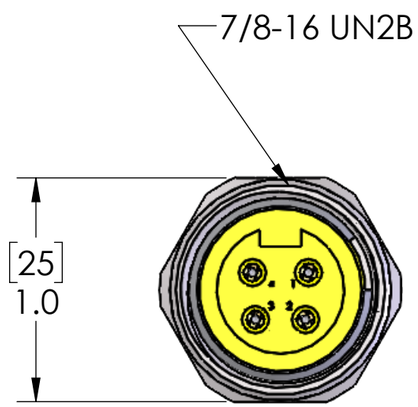

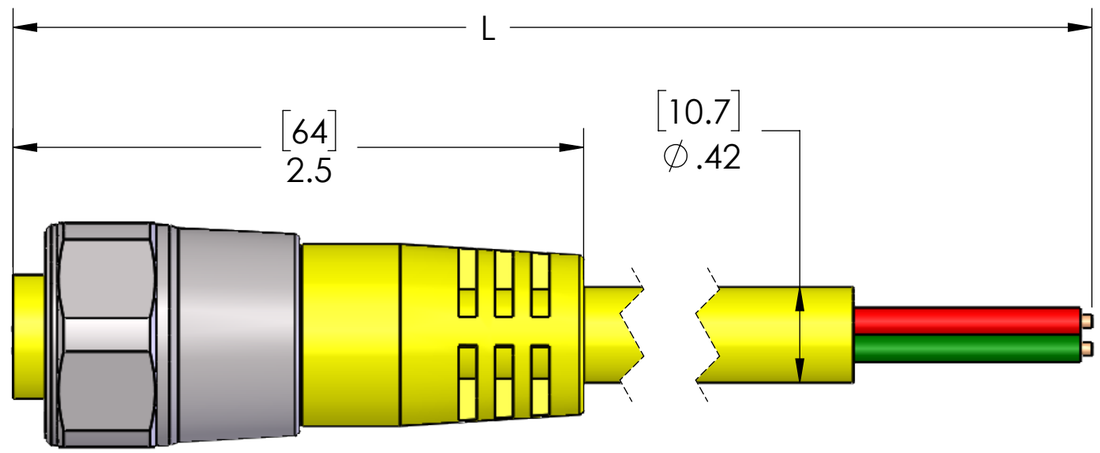

P/N	L	STD?
MIN-4FP-3-SS	36" [0.9m]	YES
MIN-4FP-6-SS	72" [1.8m]	YES
MIN-4FP-12-SS	144" [3.7m]	YES
MIN-4FP-15-SS	180" [4.6m]	NO
MIN-4FP-20-SS	240" [6.1m]	YES
MIN-4FP-30-SS	360" [9.1m]	YES
MIN-4FP-40-SS	480" [12.2m]	NO
MIN-4FP-50-SS	600" [15.2m]	YES
MIN-4FP-60-SS	720" [18.3m]	NO
MIN-4FP-100-SS	1200" [30.5m]	NO

PARTS LISTED AS NOT BEING STANDARD
MAY REQUIRE MINIMUM ORDERS

MATERIALS	
BODY:	YELLOW PVC
CONTACTS:	GOLD PLATED COPPER ALLOY
CABLE:	
STYLE:	STOOW
AWG:	16/4
JACKET:	YELLOW PVC
VOLTAGE:	600V
SHIELD:	NO
COUPLING:	STAINLESS STEEL
INSERT:	YELLOW PVC
O-RING:	N/A
APPROVALS	
US:	UL LISTED
CANADA:	C-UL LISTED
ROHS:	YES
CE:	YES
RATINGS	
PROTECTION CLASS:	UL TYPE 4 & 12, IEC IP69

PROPRIETARY AND CONFIDENTIAL

THE INFORMATION CONTAINED IN THIS DRAWING IS THE SOLE PROPERTY OF MENCOM CORPORATION. ANY REPRODUCTION IN PART OR AS A WHOLE WITHOUT THE WRITTEN PERMISSION OF MENCOM CORPORATION IS PROHIBITED.

VOLTS	600V
AMPS	10A
TEMP:	105°C

UNLESS OTHERWISE SPECIFIED:

DIMENSIONS ARE IN INCHES AND [MM]

MATERIAL

FINISH

DO NOT SCALE DRAWING

DRAWN BY	ADM
DRAWN DATE	12/15/2021
CHECKED BY	ADM
CHECK DATE	12/15/2021

COMMENTS:

MENCOM CORPORATION

TITLE:

4 PL FEM PLG, 16AWG

SIZE	DWG. NO.	REV
B	MIN-4FP-ZZ-SS	B

SCALE: 3:2 WEIGHT: SHEET 1 OF 1