PIN #	COLOR
1	BLACK
2	WHITE
3	RED
4	GREEN / YELLOW

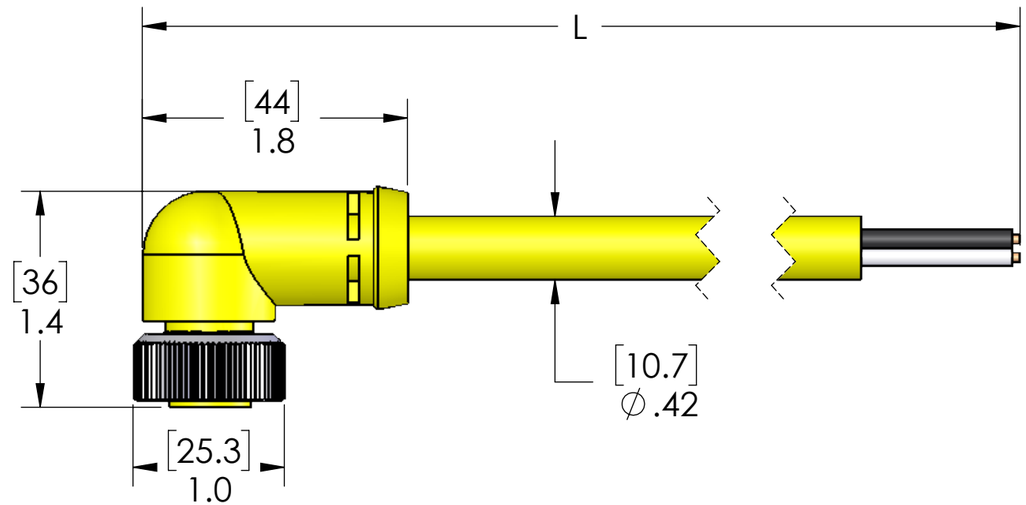

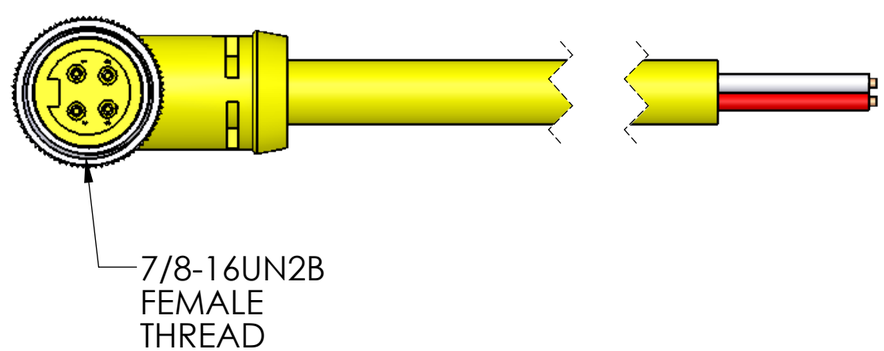

P/N	L	STD?
MIN-4FP-3-R	36" [0.9m]	YES
MIN-4FP-6-R	72" [1.8m]	YES
MIN-4FP-12-R	144" [3.7m]	YES
MIN-4FP-20-R	240" [6.1m]	YES
MIN-4FP-30-R	360" [9.1m]	YES
MIN-4FP-40-R	480" [12.2m]	NO
MIN-4FP-50-R	600" [15.2m]	YES
MIN-4FP-60-R	720" [18.3m]	NO
MIN-4FP-100-R	1200" [30.5m]	NO

PARTS LISTED AS BEING NOT STANDARD
MAY REQUIRE MINIMUM ORDERS

MATERIALS	
BODY:	YELLOW PVC
CONTACTS:	GOLD PLATED COPPER ALLOY
CABLE:	16/4 YELLOW STOOW
COUPLING:	NICKEL PLATED BRASS

APPROVALS:	
US:	UL LISTED
CANADA:	C-UL LISTED

PROPRIETARY AND CONFIDENTIAL

THE INFORMATION CONTAINED IN THIS DRAWING IS THE SOLE PROPERTY OF MENCOM CORPORATION. ANY REPRODUCTION IN PART OR AS A WHOLE WITHOUT THE WRITTEN PERMISSION OF MENCOM CORPORATION IS PROHIBITED.

VOLTS	600V
AMPS	10A
TEMP:	105°C

UNLESS OTHERWISE SPECIFIED:

DIMENSIONS ARE IN INCHES AND [MM]

MATERIAL

FINISH

DO NOT SCALE DRAWING

DRAWN BY	ADM
DRAWN DATE	09/22/2016
CHECKED BY	
CHECK DATE	

COMMENTS:

MENCOM CORPORATION

TITLE:

SIZE	DWG. NO.	REV
B	MIN-4FP-ZZ-R	B
SCALE: 1:1	WEIGHT:	SHEET 1 OF 1