PIN #	COLOR
1	BLACK
2	WHITE
3	RED
4	GREEN / YELLOW

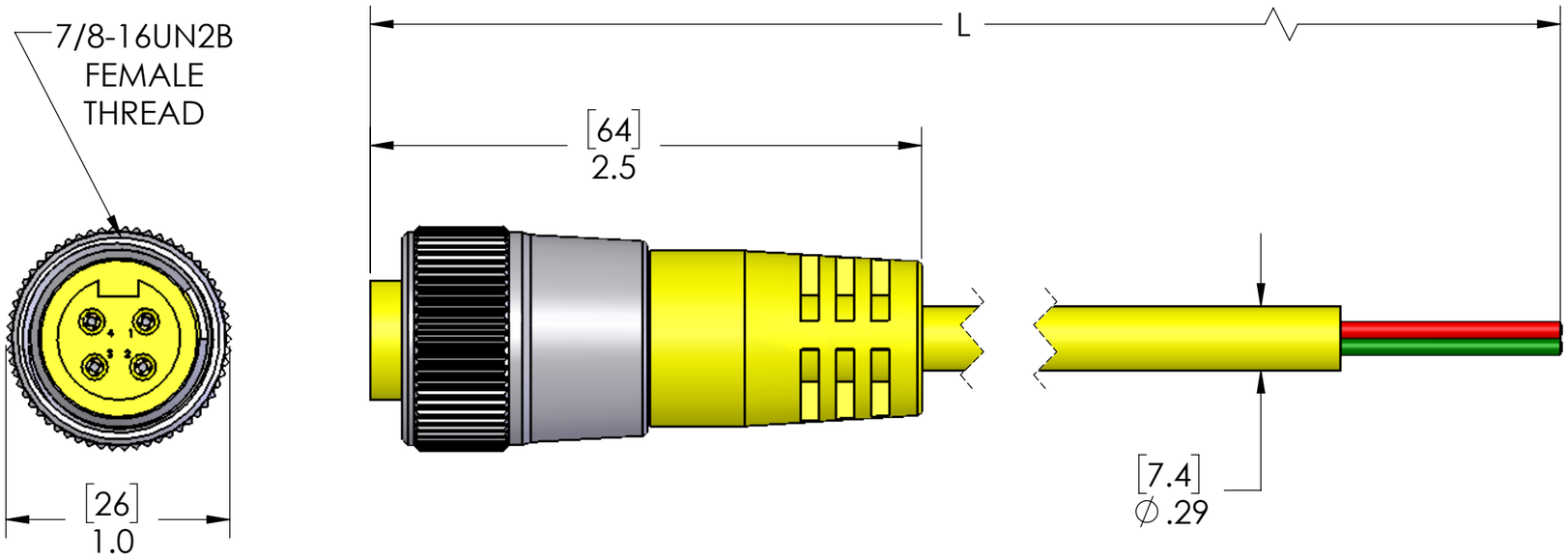

P/N	L	STD?
MIN-4FPX-3	36" [0.9m]	YES
MIN-4FPX-6	72" [1.8m]	YES
MIN-4FPX-8	96" [2.4m]	NO
MIN-4FPX-12	144" [3.7m]	YES
MIN-4FPX-15	180" [4.6m]	NO
MIN-4FPX-20	240" [6.1m]	YES
MIN-4FPX-30	360" [9.1m]	YES
MIN-4FPX-40	480" [12.2m]	NO
MIN-4FPX-50	600" [15.2m]	YES
MIN-4FPX-60	720" [18.3m]	NO

PARTS LISTED AS NOT BEING STANDARD
MAY REQUIRE MINIMUM ORDERS

MATERIALS	
BODY:	YELLOW PVC
CONTACTS:	GOLD PLATED COPPER ALLOY
CABLE:	18/4 AWM YELLOW PVC JKT
COUPLING:	NICKEL PLATED BRASS

APPROVALS:	
US	UL LISTED
CANADA	C-UL LISTED

PROPRIETARY AND CONFIDENTIAL

THE INFORMATION CONTAINED IN THIS DRAWING IS THE SOLE PROPERTY OF MENCOM CORPORATION. ANY REPRODUCTION IN PART OR AS A WHOLE WITHOUT THE WRITTEN PERMISSION OF MENCOM CORPORATION IS PROHIBITED.

VOLTS	300V
AMPS	10A
TEMP:	105°C

UNLESS OTHERWISE SPECIFIED:

DIMENSIONS ARE IN INCHES AND [MM]

MATERIAL

FINISH

DO NOT SCALE DRAWING

DRAWN BY	JJH
DRAWN DATE	07/27/2017
CHECKED BY	ADM
CHECK DATE	07/27/2017

COMMENTS:

MENCOM CORPORATION

TITLE:

4 PL FEM MIN PLUG

SIZE	DWG. NO.	REV
B	MIN-4FPX-ZZ	A

SCALE: 3:2 WEIGHT: SHEET 1 OF 1