REVISIONS			
REV.	DESCRIPTION	DATE	APPROVED
A	DRAWN IN SW	1/31/2014	BEM

PIN #	COLOR
1	BLACK
2	WHITE
3	RED
4	GREEN / YELLOW

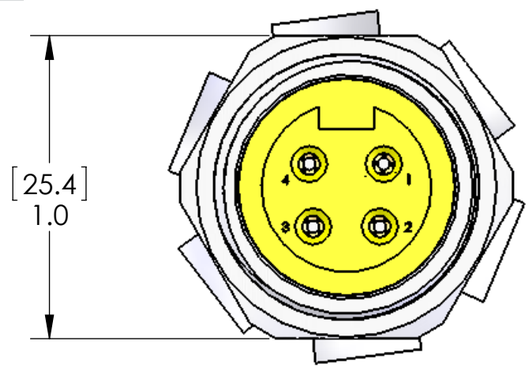

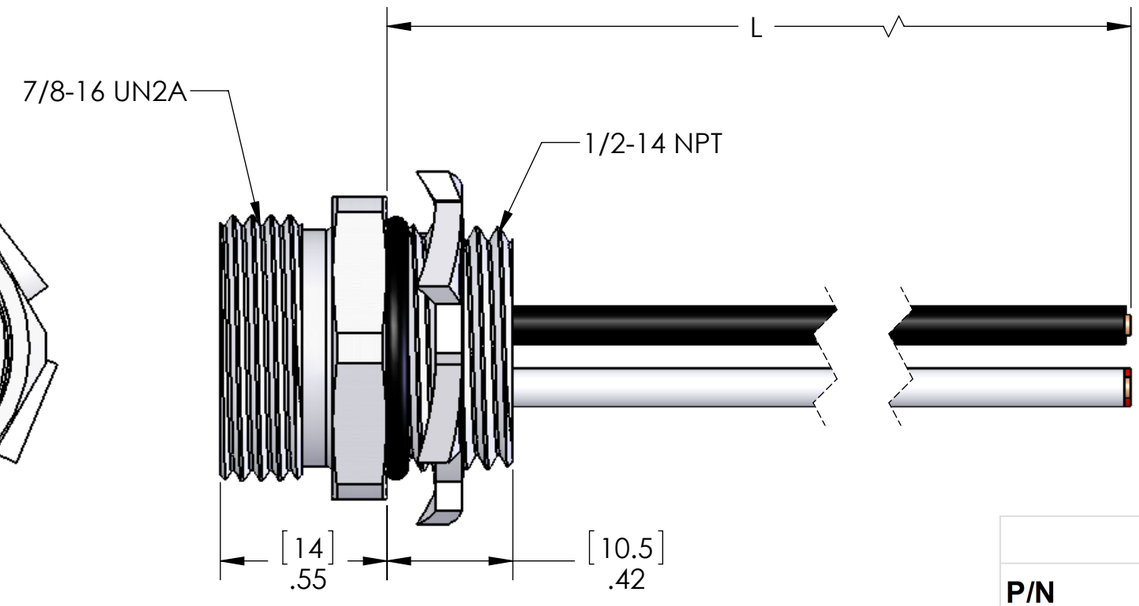

TABLE A	
P/N	L
MIN-4FR-1-SS	12" [0.3m]
MIN-4FR-2-SS	24" [0.6m]
MIN-4FR-3-SS	36" [0.9m]
MIN-4FR-4-SS	48" [1.2m]
MIN-4FR-5-SS	60" [1.5m]
MIN-4FR-6-SS	72" [1.8m]
MIN-4FR-10-SS	120" [3.0m]
MIN-4FR-15-SS	180" [4.6m]
MIN-4FR-20-SS	240" [6.1m]

MATERIALS	
BODY:	STAINLESS STEEL
CONTACTS:	GOLD PLATED COPPER ALLOY
INSERT:	YELLOW PVC
WIRE:	16AWG UL1015
O RING:	NBR
LOCK NUT:	ZINC PLATED STEEL

APPROVALS	
U.S.	UL LISTED
CANADA	C-UL LISTED

PROPRIETARY AND CONFIDENTIAL

THE INFORMATION CONTAINED IN THIS DRAWING IS THE SOLE PROPERTY OF MENCOM CORPORATION. ANY REPRODUCTION IN PART OR AS A WHOLE WITHOUT THE WRITTEN PERMISSION OF MENCOM CORPORATION IS PROHIBITED.

VOLTS	600V
AMPS	10A
TEMP	105°C

SPECIFICATIONS

UNLESS OTHERWISE SPECIFIED:

DIMENSIONS ARE IN INCHES AND [MM]

MATERIAL

FINISH

DO NOT SCALE DRAWING

	NAME
DRAWN	JJH
CHECKED	
ENG APPR.	
MFG APPR.	
Q.A.	

COMMENTS:

MENCOM CORPORATION

TITLE:

4 PL FEM RCP, 16AWG SS

SIZE	DWG. NO.	REV
B	MIN-4FR-ZZ-SS	A

SCALE: 2:1 | WEIGHT: | SHEET 1 OF 1