PIN #	COLOR
1	BLACK
2	WHITE
3	RED
4	GREEN / YELLOW

REVISIONS			
REV.	DESCRIPTION	DATE	APPROVED
A	DRAWN IN SW	8/17/2005	

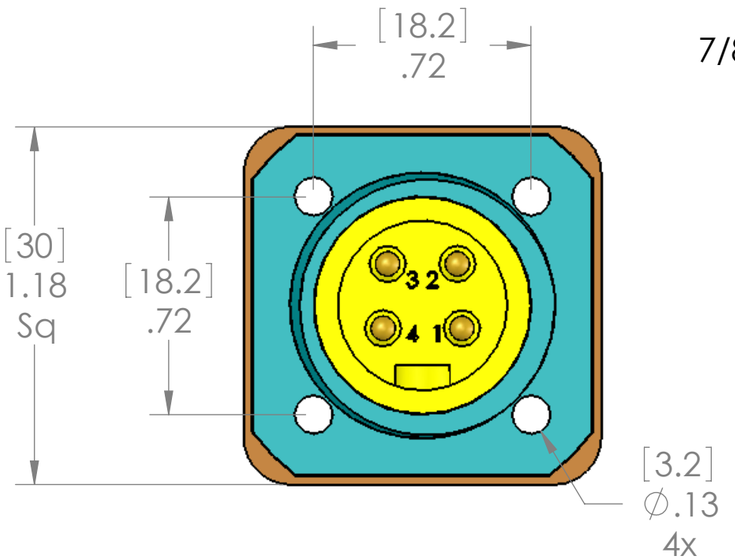

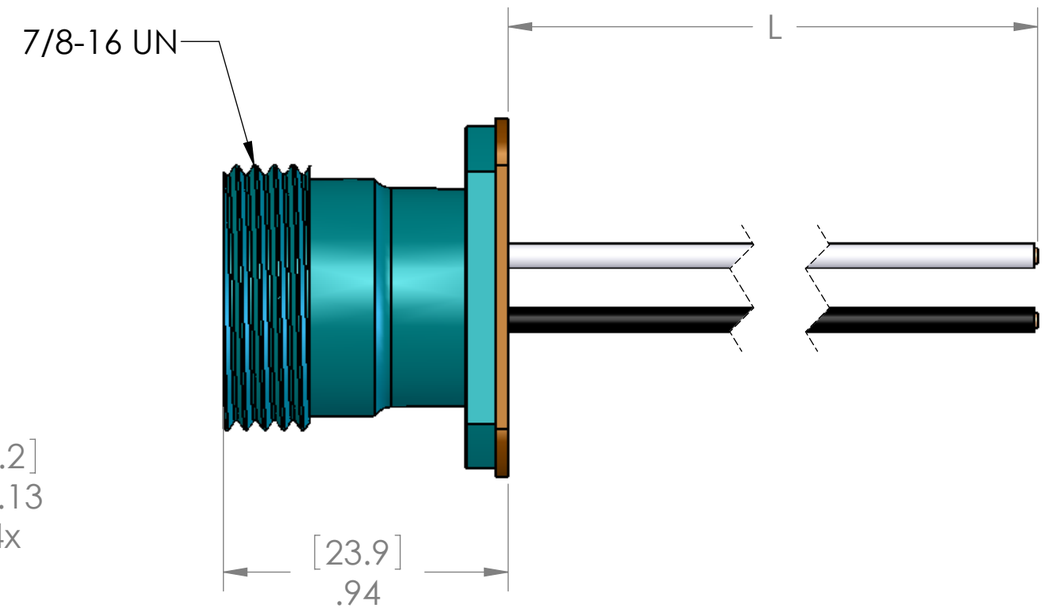

P/N	L
MIN-4MR-18-1-PM	12" [0.3m]
MIN-4MR-18-2-PM	24" [0.6m]
MIN-4MR-18-3-PM	36" [0.9m]
MIN-4MR-18-4-PM	48" [1.2m]
MIN-4MR-18-5-PM	60" [1.5m]
MIN-4MR-18-6-PM	72" [1.8m]
MIN-4MR-18-10-PM	120" [3m]

MATERIALS	
BODY:	BLUE ANODIZED ALUMINUM
CONTACTS:	GOLD PLATED COPPER ALLOY
INSERT:	YELLOW PVC
WIRE:	18AWG UL1007/1569
GASKET:	NBR

APPROVALS	
U.S.	UL LISTED
CANADA	C-UL LISTED

PROPRIETARY AND CONFIDENTIAL

THE INFORMATION CONTAINED IN THIS DRAWING IS THE SOLE PROPERTY OF MENCOM CORPORATION. ANY REPRODUCTION IN PART OR AS A WHOLE WITHOUT THE WRITTEN PERMISSION OF MENCOM CORPORATION IS PROHIBITED.

VOLTS	300V
AMPS	8A
TEMP	105°C

SPECIFICATIONS

UNLESS OTHERWISE SPECIFIED:

DIMENSIONS ARE IN INCHES AND [MM]

MATERIAL

FINISH

DO NOT SCALE DRAWING

	NAME
DRAWN	DWM
CHECKED	
ENG APPR.	
MFG APPR.	
Q.A.	

COMMENTS:

MENCOM CORPORATION

TITLE:

SIZE	DWG. NO.	REV
B	MIN-4MR-ZZ-18-PM	A

SCALE: 2:1 | WEIGHT: | SHEET 1 OF 1