PIN #	COLOR
1	WHITE
2	RED
3	GREEN / YELLOW
4	ORANGE
5	BLACK

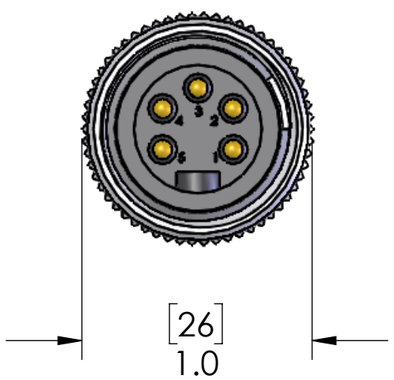

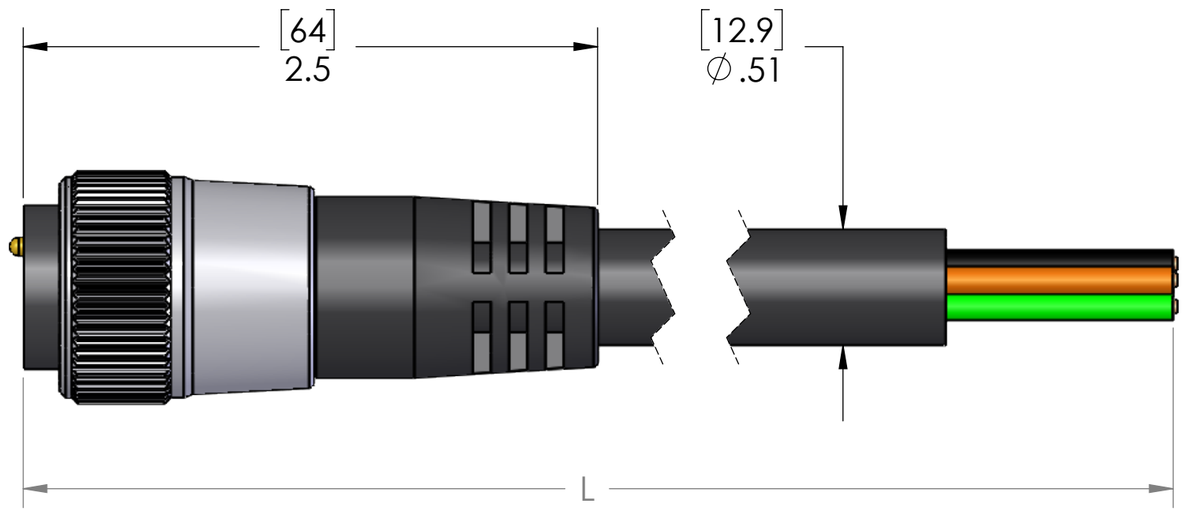

P/N	L	STD?
MIN-5MP-3-B	36" [0.9m]	YES
MIN-5MP-6-B	72" [1.8m]	YES
MIN-5MP-12-B	144" [3.7m]	YES
MIN-5MP-15-B	180" [4.6m]	NO
MIN-5MP-20-B	240" [6.1m]	YES
MIN-5MP-30-B	360" [9.1m]	YES
MIN-5MP-40-B	480" [12.2m]	NO
MIN-5MP-50-B	600" [15.2m]	YES
MIN-5MP-60-B	720" [18.3m]	NO
MIN-5MP-100-B	1200" [30.5m]	NO

PARTS LISTED AS BEING NOT STANDARD
MAY REQUIRE MINIMUM ORDERS

MATERIALS	
BODY:	BLACK PVC
CONTACTS:	GOLD PLATED COPPER ALLOY
CABLE:	16/5 BLACK PVC
COUPLING:	NICKEL PLATED BRASS

CERTIFICATIONS:	
US:	UL LISTED
CANADA:	C-UL LISTED
RoHS:	YES
CE:	YES

PROPRIETARY AND CONFIDENTIAL

THE INFORMATION CONTAINED IN THIS DRAWING IS THE SOLE PROPERTY OF MENCOM CORPORATION. ANY REPRODUCTION IN PART OR AS A WHOLE WITHOUT THE WRITTEN PERMISSION OF MENCOM CORPORATION IS PROHIBITED.

VOLTS	600V
AMPS	8A
TEMP:	105°C

UNLESS OTHERWISE SPECIFIED:

DIMENSIONS ARE IN INCHES AND [MM]

MATERIAL

FINISH

DO NOT SCALE DRAWING

DRAWN BY	JJH
DRAWN DATE	09/25/2019
CHECKED BY	GO
CHECK DATE	09/25/2019

COMMENTS:

MENCOM CORPORATION

TITLE:

SIZE B | DWG. NO. MIN-5MP-ZZ-B | REV A

SCALE: 3:2 | WEIGHT: | SHEET 1 OF 1