PIN #	COLOR
1	WHITE
2	RED
3	GREEN/YELLOW
4	ORANGE
5	BLACK

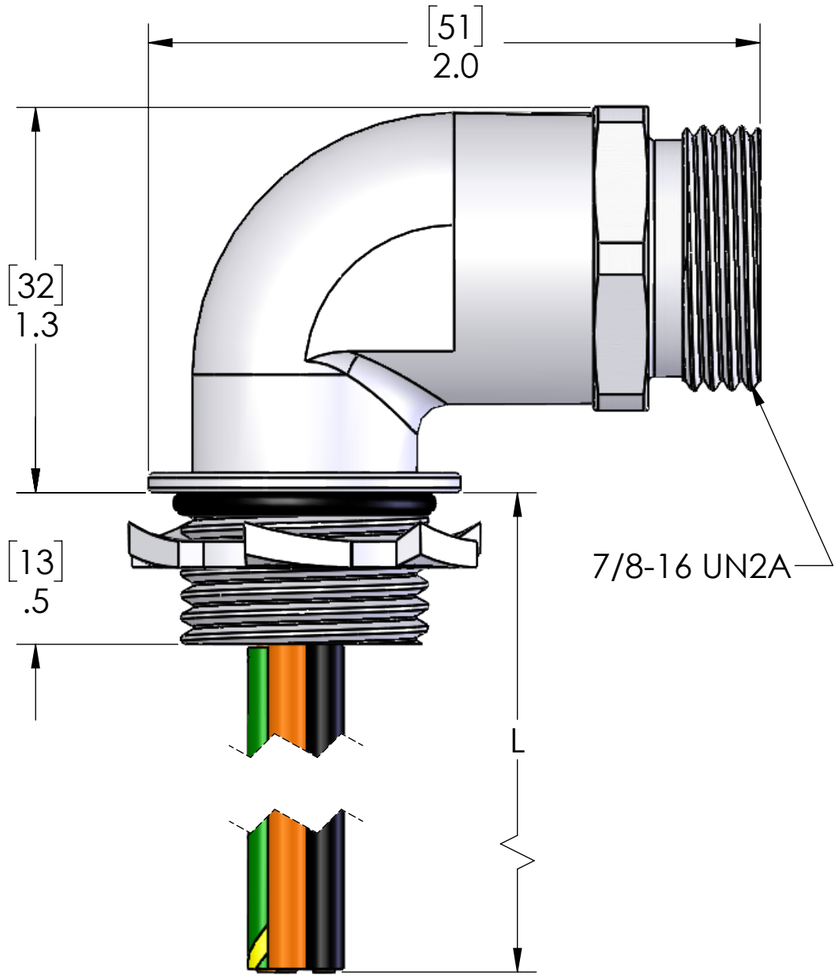

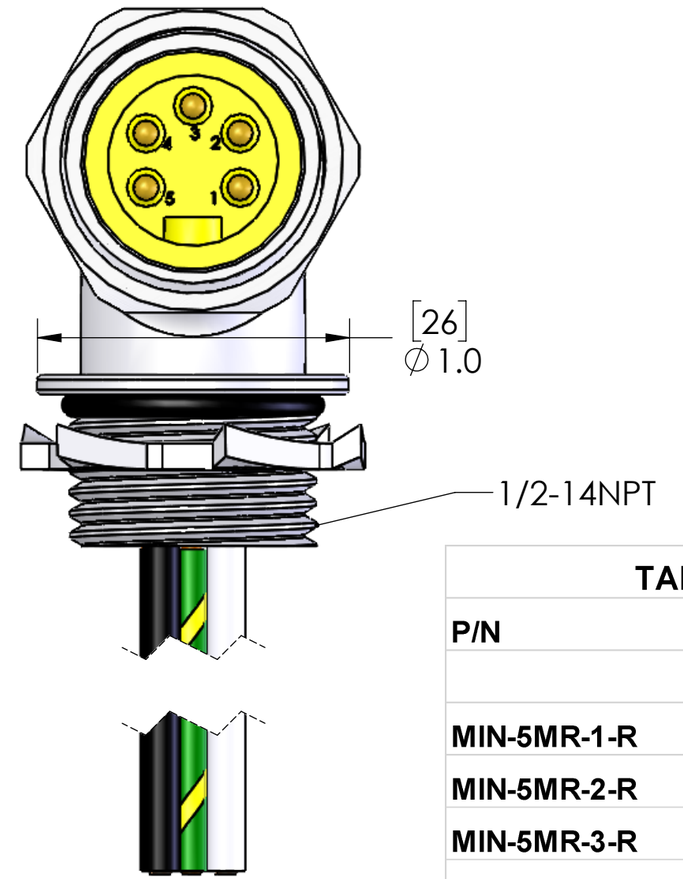

TABLE A	
P/N	L
MIN-5MR-1-R	10" [0.3m]
MIN-5MR-2-R	22" [0.6m]
MIN-5MR-3-R	36" [0.9m]
MIN-5MR-4-R	48" [1.2m]
MIN-5MR-5-R	60" [1.5m]
MIN-5MR-6-R	72" [1.8m]
MIN-5MR-10-R	120" [4.7m]

OTHER LENGTHS AVAILABLE,
PLEASE CONSULT FACTORY

MATERIALS	
ELBOW:	ZINC DIE CAST
HEX:	CLEAR ANODIZED ALUMINUM
CONTACTS:	GOLD PLATED COPPER ALLOY
WIRE:	16AWG UL1015
INSERT:	YELLOW PVC
O-RING:	NBR
LOCKNUT:	ZINC PLATED STEEL

CERTIFICATIONS:	
US:	UL LISTED
CANADA:	C-UL LISTED
RoHS:	YES
CE:	YES

PROPRIETARY AND CONFIDENTIAL

THE INFORMATION CONTAINED IN THIS DRAWING IS THE SOLE PROPERTY OF MENCOM CORPORATION. ANY REPRODUCTION IN PART OR AS A WHOLE WITHOUT THE WRITTEN PERMISSION OF MENCOM CORPORATION IS PROHIBITED.

VOLTS	600V
AMPS	8A
TEMP:	105°C

UNLESS OTHERWISE SPECIFIED:

DIMENSIONS ARE IN INCHES AND [MM]

MATERIAL

FINISH

DO NOT SCALE DRAWING

DRAWN BY	GO
DRAWN DATE	05/29/2019
CHECKED BY	JJH
CHECK DATE	05/29/2019

COMMENTS:

MENCOM CORPORATION

TITLE:

SIZE	DWG. NO.	REV
B	MIN-5MR-ZZ-R	A

SCALE: 1:2 WEIGHT: SHEET 1 OF 1