PIN #	COLOR
1	GREEN/YELLOW
2	RED
3	WHITE
4	BLUE
5	BLACK
6	ORANGE

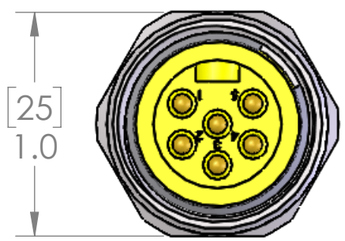

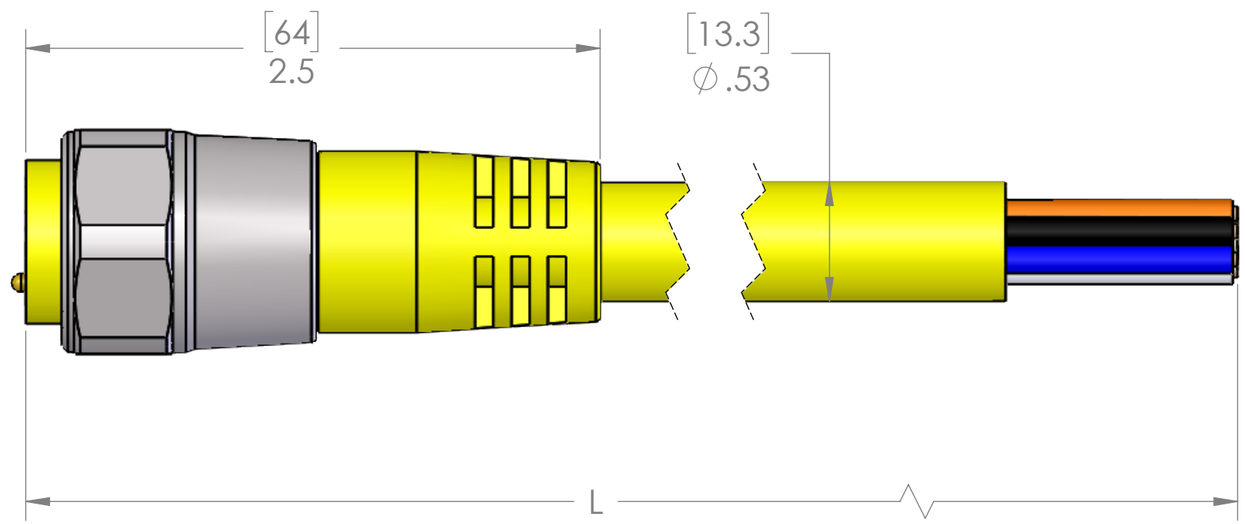

MATERIALS	
BODY:	YELLOW PVC
CONTACTS:	GOLD PLATED COPPER ALLOY
CABLE:	
STYLE:	STOOW
AWG:	16/6
JACKET:	YELLOW PVC
VOLTAGE:	600V
SHIELD:	NO
COUPLING:	STAINLESS STEEL
INSERT:	YELLOW PVC
O-RING:	N/A
APPROVALS	
US:	UL LISTED
CANADA:	C-UL LISTED
ROHS:	YES
CE:	YES
RATINGS	
PROTECTION CLASS:	UL TYPE 4 & 12, IEC IP69

P/N	L	STD?
MIN-6MP-3-SS	36" [0.9m]	YES
MIN-6MP-6-SS	72" [1.8m]	YES
MIN-6MP-12-SS	144" [3.7m]	YES
MIN-6MP-15-SS	180" [4.6m]	NO
MIN-6MP-20-SS	240" [6.1m]	YES
MIN-6MP-30-SS	360" [9.1m]	YES
MIN-6MP-40-SS	480" [12.2m]	NO
MIN-6MP-50-SS	600" [15.2m]	YES
MIN-6MP-60-SS	720" [18.3m]	NO
MIN-6MP-100-SS	1200" [30.5m]	NO

PARTS LISTED AS BEING NOT STANDARD
MAY REQUIRE MINIMUM ORDERS

PROPRIETARY AND CONFIDENTIAL
THE INFORMATION CONTAINED IN THIS DRAWING IS THE SOLE PROPERTY OF MENCOM CORPORATION. ANY REPRODUCTION IN PART OR AS A WHOLE WITHOUT THE WRITTEN PERMISSION OF MENCOM CORPORATION IS PROHIBITED.

VOLTS	600V
AMPS	8A
TEMP:	105°C

UNLESS OTHERWISE SPECIFIED:
DIMENSIONS ARE IN INCHES AND [MM]

MATERIAL
FINISH
DO NOT SCALE DRAWING

DRAWN BY	APR
DRAWN DATE	05/17/2022
CHECKED BY	JJH
CHECK DATE	05/17/2022

COMMENTS:

MENCOM CORPORATION

TITLE:

SIZE B | DWG. NO. MIN-6MP-ZZ-SS | REV A

SCALE: 3:2 | WEIGHT: | SHEET 1 OF 1