| PIN # | COLOR |
|---|---|
| | |
| 1 | ORANGE |
| 2 | BLUE |
| 3 | WHITE w/BLACK |
| 4 | BLACK |
| 5 | WHITE |
| 6 | RED |
| 7 | GREEN / YELLOW |
| 8 | RED w/BLACK |

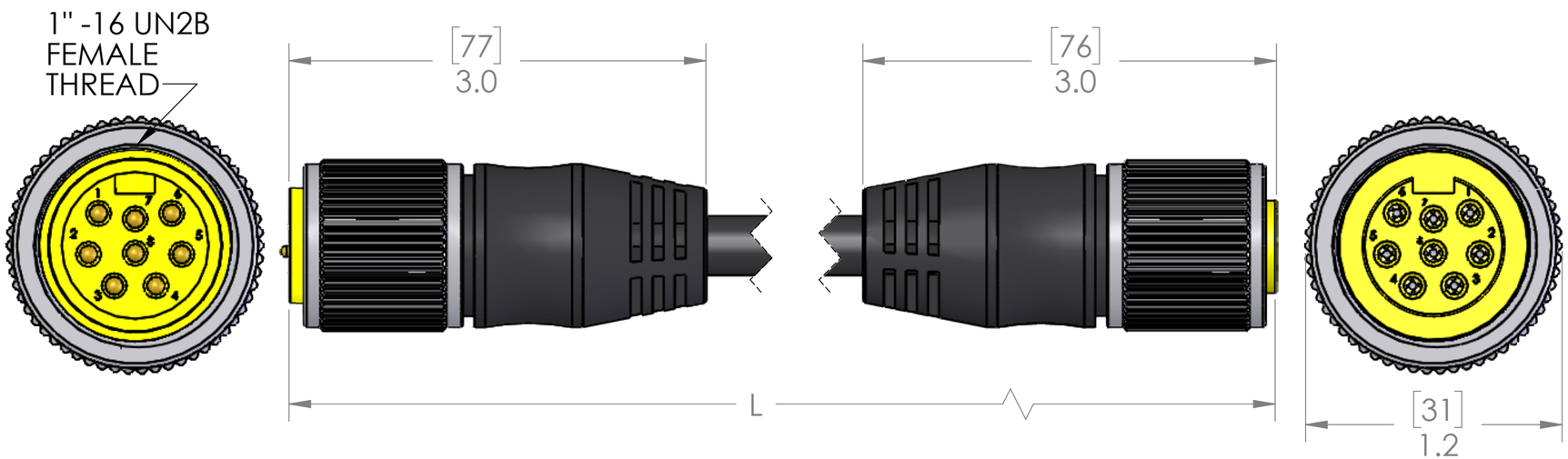


| TABLE A | | |
|---|---|---|
| P/N | L | STD? |
| | | |
| MIN-8MFP-3-C011 | 36" [0.9M] | YES |
| MIN-8MFP-6-C011 | 72" [1.8M] | YES |
| MIN-8MFP-12-C011 | 144" [3.7M] | YES |
| MIN-8MFP-15-C011 | 180" [4.6M] | NO |
| MIN-8MFP-20-C011 | 240" [6.1M] | YES |
| MIN-8MFP-30-C011 | 360" [9.1M] | YES |
| MIN-8MFP-40-C011 | 480" [12.2M] | NO |
| MIN-8MFP-50-C011 | 600" [15.2M] | YES |
| MIN-8MFP-60-C011 | 720" [18.3M] | NO |
| MIN-8MFP-100-C011 | 1200" [30.5M] | NO |

PARTS LISTED AS NOT BEING STANDARD
MAY HAVE MINIMUM ORDER QUANTITIES

| MATERIALS | |
|---|---|
| | |
| BODY: | BLACK PVC |
| INSERT: | YELLOW PVC |
| CONTACTS: | GOLD PLATED COPPER ALLOY |
| CABLE: | 16/8 TC-ER BLACK PVC |
| COUPLING: | NICKEL PLATED BRASS |

| APPROVALS: | |
|---|---|
| | |
| US: | UL LISTED |
| CANADA: | C-UL LISTED |
| RoHS: | YES |
| CE: | YES |


**PROPRIETARY AND CONFIDENTIAL**

THE INFORMATION CONTAINED IN THIS DRAWING IS THE SOLE PROPERTY OF MENCOM CORPORATION. ANY REPRODUCTION IN PART OR AS A WHOLE WITHOUT THE WRITTEN PERMISSION OF MENCOM CORPORATION IS PROHIBITED.


| | |
|---|---|
| VOLTS | 600 |
| AMPS | 7A |
| TEMP: | 105°C |

UNLESS OTHERWISE SPECIFIED:

DIMENSIONS ARE IN INCHES AND [MM]

MATERIAL

FINISH

DO NOT SCALE DRAWING

| | |
|---|---|
| DRAWN BY | GO |
| DRAWN DATE | 11/19/2019 |
| CHECKED BY | JJH |
| CHECK DATE | 11/19/2019 |

COMMENTS:

MENCOM CORPORATION

TITLE:

| SIZE | DWG. NO. | REV |
|---|---|---|
| B | MIN-8MFP-ZZ-C011 | A |
| SCALE: 1:2 | WEIGHT: | SHEET 1 OF 1 |