PIN #	COLOR
1	BLACK
2	WHITE
3	RED
4	GREEN / YELLOW

REVISIONS			
REV.	DESCRIPTION	DATE	APPROVED
A	DRAWN IN SW	3/11/2015	bem

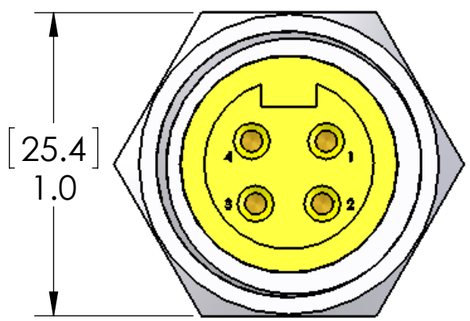

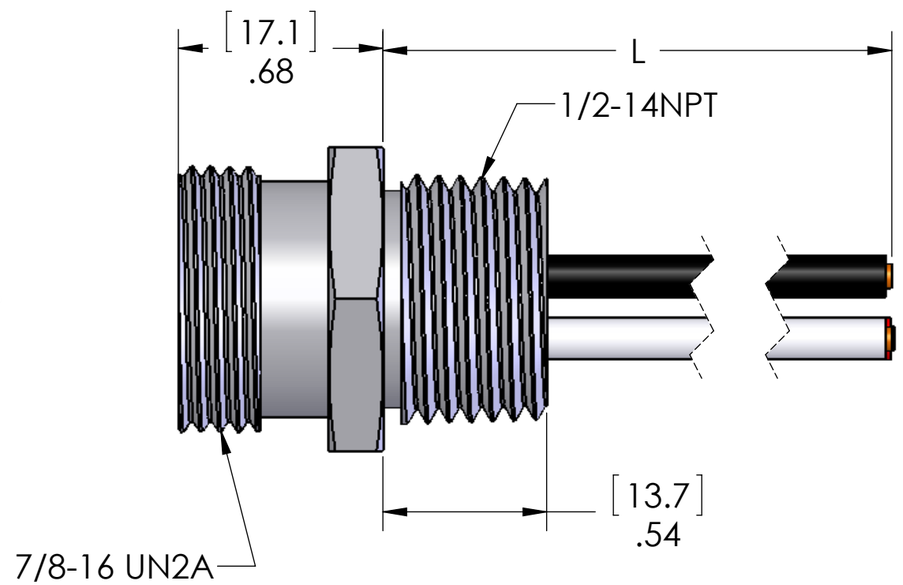

FOR LENGTHS GREATER THAN 12"
LOCKNUT AND O-RING ARE INCLUDED

TABLE A	
P/N	L
MINH-4FRM-1	12" [0.3m]
MINH-4FRM-2	24" [0.6m]
MINH-4FRM-3	36" [0.9m]
MINH-4FRM-4	48" [1.2m]
MINH-4FRM-6	72" [1.8m]
MINH-4FRM-10	120" [3.0m]
MINH-4FRM-15	180" [4.6m]
MINH-4FRM-20	240" [6.0m]

MATERIALS:	
BODY:	CLEAR ANODIZED ALUMINUM
INSERT:	YELLOW PVC
CONTACTS:	GOLD PLATED COPPER ALLOY
WIRE:	14AWG UL1015
O-RING:	BUNA-N
LOCKNUT:	ZINC PLATED STEEL

APPROVALS	
U.S.	UL LISTED
CANADA	C-UL LISTED

PROPRIETARY AND CONFIDENTIAL

THE INFORMATION CONTAINED IN THIS DRAWING IS THE SOLE PROPERTY OF MENCOM CORPORATION. ANY REPRODUCTION IN PART OR AS A WHOLE WITHOUT THE WRITTEN PERMISSION OF MENCOM CORPORATION IS PROHIBITED.

VOLTS	600V
AMPS	15A
TEMP	105C
APPLICATION	

UNLESS OTHERWISE SPECIFIED:
DIMENSIONS ARE IN INCHES AND [MM]

INTERPRET GEOMETRIC TOLERANCING PER:
MATERIAL
FINISH
DO NOT SCALE DRAWING

	NAME
DRAWN	JJH
CHECKED	
ENG APPR.	
MFG APPR.	
Q.A.	

COMMENTS:

MENCOM CORPORATION

TITLE:

SIZE	DWG. NO.	REV
B	MINH-4FRM-ZZ	A
SCALE: 1:1	WEIGHT:	SHEET 1 OF 1