PIN #	COLOR
1	BLACK
2	WHITE
3	RED
4	GREEN / YELLOW

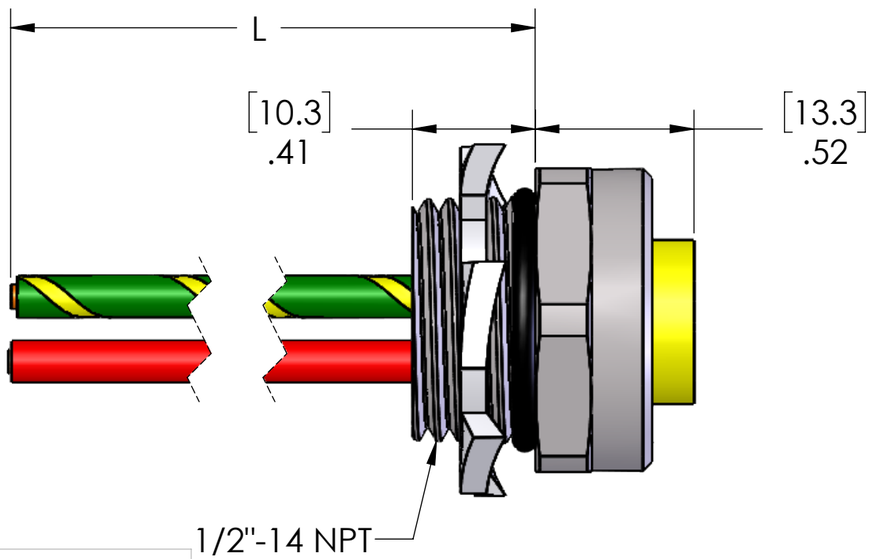

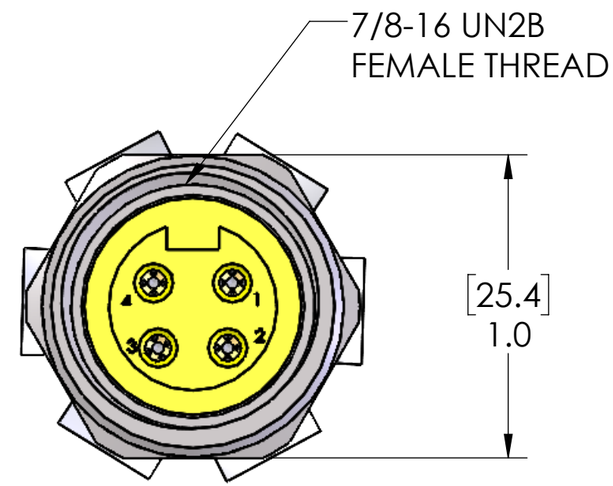

TABLE A	
P/N	L
MINH-4FR-1-SS	12" [0.3m]
MINH-4FR-0.5M-SS	20" [0.5m]
MINH-4FR-0.6M-SS	24" [0.6m]
MINH-4FR-1M-SS	40" [1m]
MINH-4FR-2M-SS	79" [2m]
MINH-4FR-3M-SS	118" [3m]
MINH-4FR-5M-SS	197" [5m]

OTHER LENGTHS AVAILABLE
PLEASE CONSULT FACTORY

MATERIALS	
SHELL:	316 STAINLESS STEEL
CONTACTS:	GOLD PLATED COPPER ALLOY
WIRES:	
STYLE:	UL1015
AWG:	14 AWG
JACKET:	PVC
VOLTAGE:	600V
INSERT:	YELLOW PVC
O-RING:	NBR
NUT:	ZINC PLATED STEEL
APPROVALS	
US:	UL LISTED
CANADA:	C-UL LISTED
ROHS:	YES
CE & UKCA:	YES
RATINGS	
PROTECTION CLASS:	UL TYPE 4 & 12, IEC IP69

PROPRIETARY AND CONFIDENTIAL

THE INFORMATION CONTAINED IN THIS DRAWING IS THE SOLE PROPERTY OF MENCOM CORPORATION. ANY REPRODUCTION IN PART OR AS A WHOLE WITHOUT THE WRITTEN PERMISSION OF MENCOM CORPORATION IS PROHIBITED.

VOLTS	600V
AMPS	15A
TEMP:	105°C

UNLESS OTHERWISE SPECIFIED:

DIMENSIONS ARE IN INCHES AND [MM]

MATERIAL

FINISH

DO NOT SCALE DRAWING

DRAWN BY	ADM
DRAWN DATE	08/10/2022
CHECKED BY	ADM
CHECK DATE	08/10/2022

COMMENTS:

MENCOM CORPORATION

TITLE:

SIZE	DWG. NO.	REV
B	MINH-4FR-ZZ-SS	A
SCALE: 2:1	WEIGHT:	SHEET 1 OF 1