PIN #	COLOR
1	BLACK
2	WHITE
3	RED
4	GREEN / YELLOW

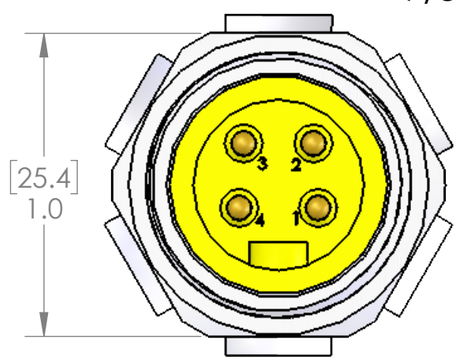

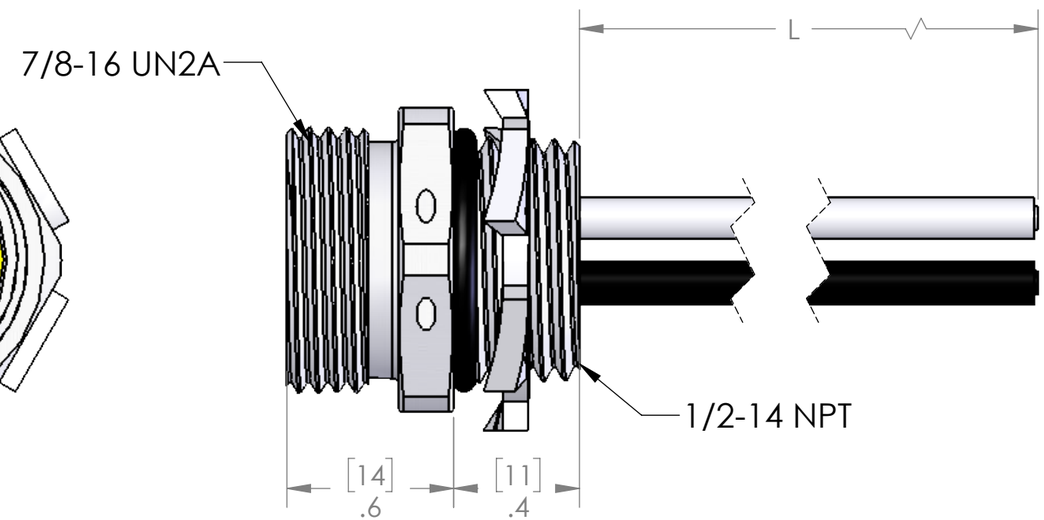

TABLE A	
P/N	L
MINH-4MR-0.3M-SS	12" [0.3m]
MINH-4MR-0.5M-SS	20" [0.5m]
MINH-4MR-0.6M-SS	24" [0.6m]
MINH-4MR-1M-SS	40" [1m]
MINH-4MR-2M-SS	79" [2m]
MINH-4MR-3M-SS	118" [3m]
MINH-4MR-5M-SS	197" [5m]

OTHER LENGTHS ARE AVAILABLE, PLEASE CONSULT FACTORY

MATERIALS	
BODY:	STAINLESS STEEL
CONTACTS:	GOLD PLATED COPPER ALLOY
INSERT:	YELLOW PVC
WIRE:	14AWG UL1015
JAM-NUT:	ZINC PLATED STEEL
O-RING:	NBR

CERTIFICATIONS:	
US:	UL LISTED
CANADA:	C-UL LISTED
RoHS:	YES
CE:	YES

PROPRIETARY AND CONFIDENTIAL

THE INFORMATION CONTAINED IN THIS DRAWING IS THE SOLE PROPERTY OF MENCOM CORPORATION. ANY REPRODUCTION IN PART OR AS A WHOLE WITHOUT THE WRITTEN PERMISSION OF MENCOM CORPORATION IS PROHIBITED.

VOLTS	600V
AMPS	15A
TEMP:	105°C

UNLESS OTHERWISE SPECIFIED:

DIMENSIONS ARE IN INCHES AND [MM]

MATERIAL

FINISH

DO NOT SCALE DRAWING

DRAWN BY	GO
DRAWN DATE	05/20/2020
CHECKED BY	JJH
CHECK DATE	05/20/2020

COMMENTS:

MENCOM CORPORATION

TITLE:

SIZE	DWG. NO.	REV
B	MINH-4MR-ZZ-SS	A
SCALE: 1:1	WEIGHT:	SHEET 1 OF 1